Salt Lake County/Utah County, Utah

DIVERSION STRUCTURES

Utah Lake Jordan River Flood Management Program

APPROVALS

SALT LAKE COUNTY

R. TERRY HOLZWORTH
Director of Flood Control

DONALD G. SPENCER, P.E.
Director of Public Works

D. MICHAEL STEWART
Chairman County Commissioners

APPROVALS

UTAH COUNTY

CLYDE R. NAYLOR, P.E.
Engineer

KEITH J. RICHAN
Chairman County Commissioners

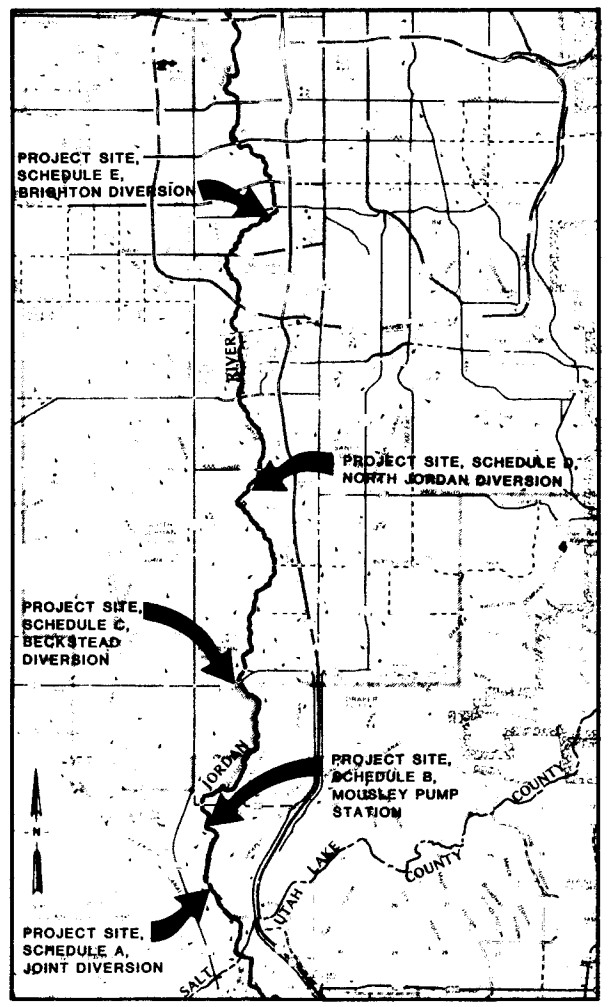

SCALE: 1/2" = 1 MILE

VICINITY MAP

LEGEND

4490	CONTOUR LINE & ELEVATION
—x—x—	CHAIN LINK FENCE
× 95.0	EXISTING GRADE
⊗ 95.0	FINISH GRADE
	BORING LOCATION
▲	DREDGING TRAVERSE LINE CONTROL POINT
●	LOCAL BASE LINE CONTROL POINT
	EXISTING POWER POLE
PWR	OVERHEAD POWER LINE
	RIPRAP
	CONSTRUCTION LIMITS
5:1	NEW EMBANKMENT - SLOPE AS INDICATED
W	EXISTING WATER LINE
I I I	ROADWAY BARRIER
	HANDRAIL

NOTE:
IN GENERAL, EXISTING STRUCTURES AND FACILITIES ARE NOTED AS "EXISTING" AND ARE SHOWN IN LIGHT LINE WEIGHTS, OR AS SCREENED BACKGROUNDS. NEW STRUCTURES ARE SHOWN IN HEAVY LINE WEIGHTS.

SECTION (LETTER) OR DETAIL (NUMERAL) DESIGNATION — A

SHEET NUMBER (REPLACED WITH A LINE IF TAKEN AND SHOWN ON SAME SHEET) — 5

ON DRAWING WHERE SECTION OR DETAIL IS TAKEN: SHEET NUMBER WHERE SHOWN

ON DRAWING WHERE SECTION OR DETAIL IS SHOWN: SHEET NUMBER(S) WHERE TAKEN

DETAIL AND SECTION DESIGNATION

DESIGN DETAIL DESIGNATION (NUMERAL) — 32

SHOWN ON DESIGN DETAIL DRAWING (S)

DESIGN DETAIL DESIGNATION

INDEX TO DRAWINGS

COMMON SHEETS
- 1 VICINITY MAP, LEGEND, AND INDEX TO DRAWINGS
- 2 DESIGN DETAILS
- 3 DESIGN DETAILS
- 4 DESIGN DETAILS

JOINT DIVERSION - SCHEDULE A
- A-1 SITE PLAN
- A-2 SITE PLAN, SECTIONS AND DETAILS
- A-3 STRUCTURAL PLAN
- A-4 STRUCTURAL SECTIONS
- A-5 SOUTH JORDAN STRUCTURAL

MOUSLEY PUMP STATION - SCHEDULE B
- B-1 SITE PLAN, PUMP STATION AND DETAILS
- B-2 ELECTRICAL

BECKSTEAD DIVERSION - SCHEDULE C
- C-1 SITE PLAN
- C-2 STRUCTURAL PLAN
- C-3 STRUCTURAL SECTIONS

NORTH JORDAN DIVERSION - SCHEDULE D
- D-1 SITE PLAN
- D-2 STRUCTURAL PLAN
- D-3 STRUCTURAL SECTIONS

BRIGHTON DIVERSION - SCHEDULE E
- E-1 SITE PLAN
- E-2 BRIDGE AND CANAL STRUCTURE
- E-3 PLAN AND SECTIONS
- E-4 OVERFLOW STRUCTURE

ABBREVIATIONS

AB	ANCHOR BOLT	EXST	EXISTING	PNL	PANEL
AC	ASPHALTIC CONCRETE	FAB	FABRICATE	PRESS.	PRESSURE
ADDL	ADDITIONAL	FLG	FLANGE	PVC	POLYVINYL CHLORIDE
AL	ALUMINUM	FLEX.	FLEXIBLE	RAD	RADIUS
APPROX	APPROXIMATE	FLL	FLOWLINE	REINF	REINFORCING
BLDG	BUILDING	FNSH	FINISH	REM	REMOVE
BM	BENCH MARK	FT	FOOT	REQD	REQUIRED
BOT	BOTTOM	FTG	FOOTING	RM	ROOM
CJ	CONSTRUCTION JOINT	FUT	FUTURE	SCHED	SCHEDULE
CLR	CLEAR	GALV	GALVANIZED	SH	SHEET
CMU	CONCRETE MASONRY UNITS	GND	GROUND	SIM	SIMILAR
CONC	CONCRETE	H.A.S.	HEADED ANCHOR STUD	SLP	SLOPE
CONN	CONNECTOR	HORIZ	HORIZONTAL	SP	SPACES
CONN	CONNECTION	INFL	INFLUENT	SPEC	SPECIFICATIONS
CONSTR	CONSTRUCTION	INVT	INVERT	SQ	SQUARE
CONT	CONTINUATION	JT	JOINT	SST	STAINLESS STEEL
COR	CORNER	LBS	POUNDS	SFTB	SQUARE FEET THRUST BLOCK
CPLG	COUPLING	LF	LINEAR FEET	STD	STANDARD
CTR	CENTER	MAX	MAXIMUM	STL	STEEL
CU	CUBIC	MECH	MECHANICAL	T&B	TOP AND BOTTOM
D	DRAIN	MFR	MANUFACTURER	THRU	THROUGH
DET	DETAIL	MH	MANHOLE	T.O.	TOP OF
DIA	DIAMETER	MIN	MINIMUM	TYP	TYPICAL
DIM.	DIMENSION	MJ	MECHANICAL JOINT	VERT	VERTICAL
DWGS	DRAWINGS	NIC	NOT IN CONTRACT	W/	WITH
EA	EACH	NO.	NUMBER	WS	WATERSTOP
EF	EACH FACE	NTS	NOT TO SCALE	WS	WATER SURFACE
ELB	ELBOW	OBS	OBSERVATION	WS	WELDED STEEL
ELEC	ELECTRICAL	OC	ON CENTER	WWF	WELDED WIRE FABRIC
EL	ELEVATION	OPNG	OPENING	WWM	WELDED WIRE MESH
EQL	EQUAL	PEN.	PENETRATION	YD	YARD
EQPT	EQUIPMENT	PE	PLAIN END		
EW	EACH WAY	PJF	PREMOLDED JOINT FILLER		
EXP	EXPAND	PL	PLATE		

REGISTERED PROFESSIONAL ENGINEER No 6778 MICHAEL W. COLLINS 12/10/84 STATE OF UTAH

CH2M HILL

DSGN L.E. WILLIAMS
DR D.N. BARNES
CHK L.R. TAYLOR
APVD M.W. COLLINS

NO.	DATE	REVISION	BY	APVD

REUSE OF DOCUMENTS
THIS DOCUMENT, AND THE IDEAS AND DESIGNS INCORPORATED HEREIN, AS AN INSTRUMENT OF PROFESSIONAL SERVICE, IS THE PROPERTY OF CH2M HILL AND IS NOT TO BE USED, IN WHOLE OR IN PART, FOR ANY OTHER PROJECT WITHOUT THE WRITTEN AUTHORIZATION OF CH2M HILL.
©CH2M HILL, INC.

VERIFY SCALES
BAR IS ONE INCH ON ORIGINAL DRAWING.
0 1"
IF NOT ONE INCH ON THIS SHEET, ADJUST SCALES ACCORDINGLY.

Utah Lake Jordan River Flood Management Program

DIVERSION STRUCTURES-COMMON SHEETS

VICINITY MAP, LEGEND, AND INDEX TO DRAWINGS

SHEET 1
DATE DEC. 1984
PROJ NO. B18331.F1

OVERLAY IDENTIFICATION: COMPOSITE A
OVERLAY A
SCREEN
PROJ NO.
CONTRACT

NOTE: NOT ALL DESIGN DETAILS APPLY TO EACH SCHEDULE

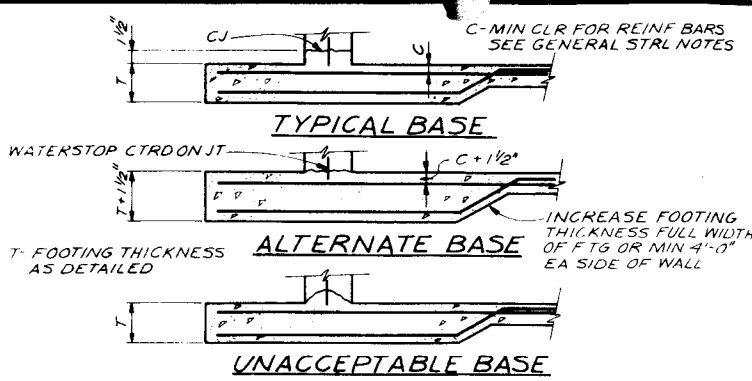

WALL BASE CONSTR JOINT (1)

NTS

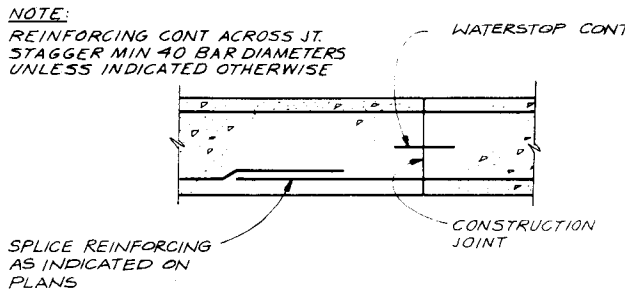

CONSTRUCTION JOINT (2)

NTS

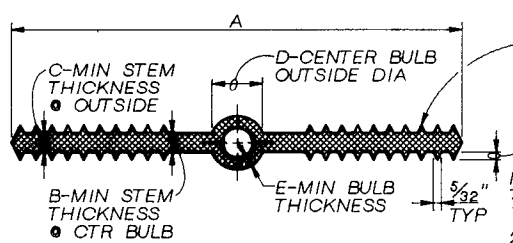

NOTES:
1. MATERIAL QUALITY PER SPECIFICATIONS.
2. DIM REQUIREMENTS INDICATED SHOULD BE GIVEN TO SUPPLIERS PRIOR TO PLACING ORDERS.
3. NON-ROUND CENTER BULBS SHALL HAVE A MIN OUTSIDE DIM OF 'D'.

SIZE	A	B	C	D	E	F
4"x3/16"	4"	3/16"	3/16"	¾"	¼"	4
6"x3/8"	6"	3/8"	3/8"	⅞"	¼"	6
9"x3/8"	9"	3/8"	3/8"	1"	¼"	8

PLASTIC WATERSTOP (3)

NTS

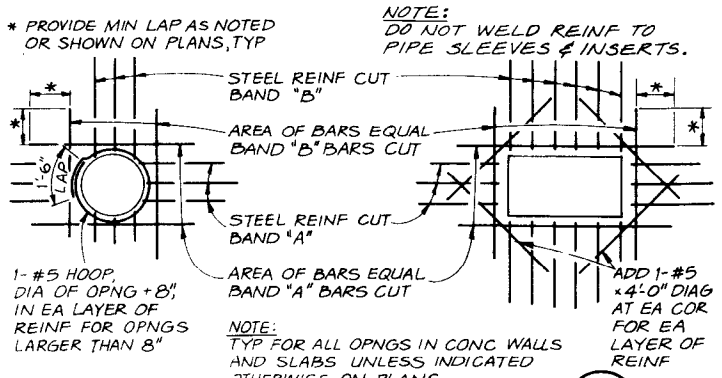

OPENING REINFORCING (4)

NTS

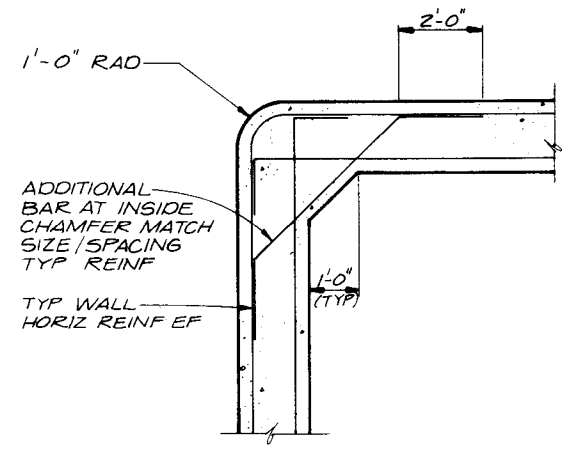

NOTE:
VERTICAL REINFORCEMENT NOT SHOWN

CORNER REINFORCING (5)

NTS

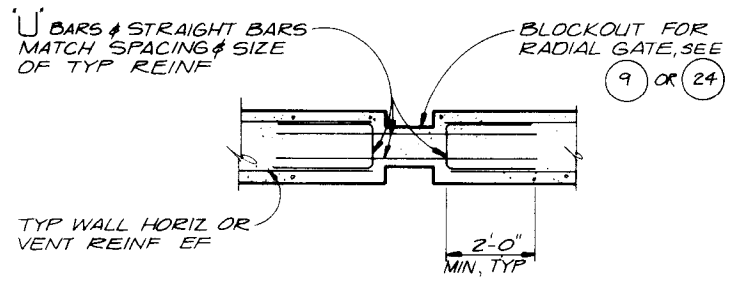

REINFORCING AT WALL RADIAL GATE BLOCKOUT (6)

NTS

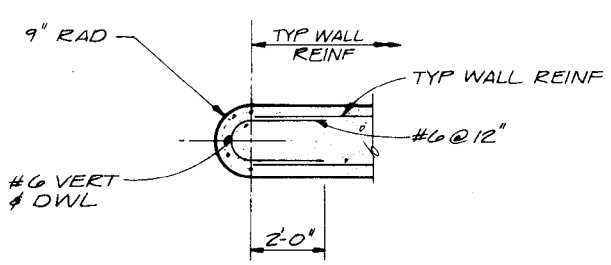

REINFORCING AT ROUND WALL END (7)

NTS

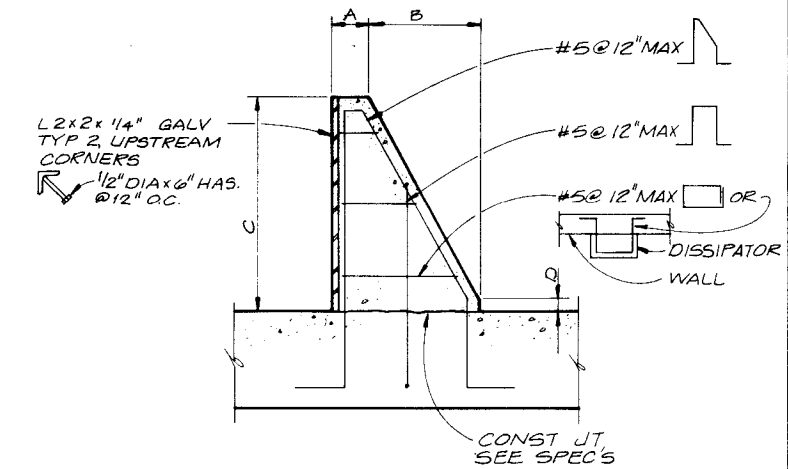

TYPE	A	B	C	D
1	6"	1'-6"	3'-0"	2"
2	1'-0"	3'-6"	4'-0"	6"
3	1'-0"	4'-0"	4'-6"	6"
4	1'-0"	3'-0"	4'-0"	6"

ENERGY DISSIPATOR (8)

NTS

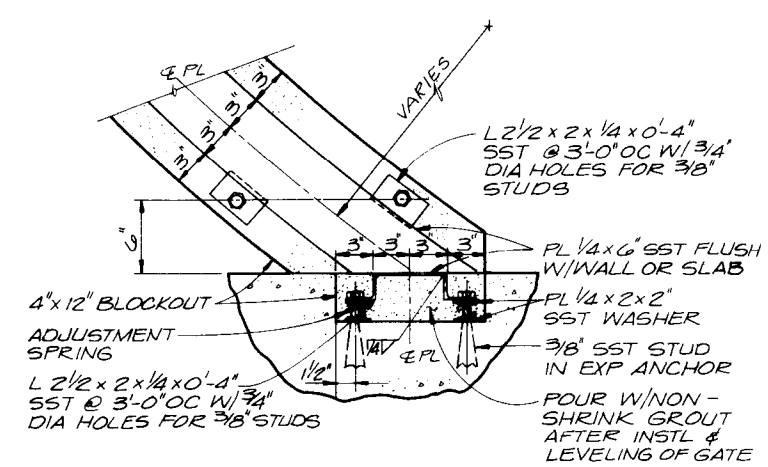

RADIAL GATE SEAL (9)

NTS

GENERAL STRUCTURAL NOTES

REINFORCING DETAILS

1. UNLESS OTHERWISE SHOWN, CONC WALLS AND SLABS SHALL BE REINF AS FOLLOWS: #4@12" EW CENTER OF 6" SECTIONS; #5@12" EW CENTER OF 8" SECTIONS; #4@12" EWEF OF 10" SECTIONS; #5@12" EWEF OF 12" SECTIONS. SINGLE MAT REINF SHALL BE AT CENTER OF SECTION, UNLESS SHOWN OTHERWISE.
2. MIN CLR FOR REINF BARS, UNLESS SHOWN OTHERWISE, SHALL BE 3" WHEN PLACED ON GROUND; FOR SURFACES EXPOSED TO WATER OR WEATHER - 1½" CLR FOR #5 BAR AND SMALLER AND 2" CLR FOR LARGER BARS; INTERIOR SLABS ¾" CLR, INTERIOR BEAMS 1½" CLR.
3. REFER TO WALL CORNER AND WALL INTERSECTION REINFORCING DETAIL.
4. ALL HOOKS UNLESS OTHERWISE SHOWN, SHALL BE A 90° DEGREE STANDARD HOOK AS DEFINED IN LATEST EDITION OF ACI 318.
5. UNLESS OTHERWISE NOTED, ALL WALL REINF BARS SHALL BE CONT AROUND CORNERS AND THROUGH COL OR PILASTERS. REINF SHALL BE EXTENDED INTO CONNECTING WALLS AND TERMINATED WITH STANDARD HOOK.
   ON THE OPPOSITE FACE OF THE CONNECTING WALLS, AS INDICATED ELSEWHERE ON THIS SHEET. VERT WALL BARS SHALL BE LAPPED WITH DOWELS FROM BASE SLABS AND EXTENDED INTO THE TOP FACE OF ELEVATED SLABS AND TERMINATED WITH STANDARD HOOK AT TOP OF SLAB. UNLESS INDICATED OTHERWISE, CONTRACTOR MAY SPLICE CONTINUOUS ELEVATED SLAB BARS AT LOCATIONS OF HIS CHOOSING, EXCEPT THAT TOP BAR SPLICES SHALL BE LOCATED AT MIDSPAN AND BOTTOM BAR SPLICES SHALL BE LOCATED AT SUPPORTS. UNLESS INDICATED OTHERWISE, CONTRACTOR MAY SPLICE CONTINUOUS SLAB-ON-GRADE BARS AT LOCATIONS OF HIS CHOOSING. EXCEPT THAT TOP BAR SPLICES SHALL BE LOCATED AT SUPPORTS (WALLS) AND BOTTOM BAR SPLICES SHALL BE LOCATED AT MIDSPAN. ALL REINF HOOKS AND SPLICES UNLESS OTHERWISE NOTED, SHALL SATISFY THE MINIMUM REQUIREMENT INDICATED IN SCHEDULE.
6. CONT WS SHALL BE INSTALLED IN ALL CJ IN WALLS INDICATED.

DETAIL OF REINFORCEMENT - LAP LENGTHS

BAR SIZE		#6 OR SMALLER	#7	#8	#9	#10	#11
CONC DESIGN STRENGTH		4000 PSI					
GR 40	TOP BAR*	32 DIA, MIN 1'-6"	2'-6"	3'-3"	4'-0"	5'-0"	6'-4"
	OTHER BAR	22 DIA, MIN 1'-0"	1'-9"	2'-4"	3'-0"	3'-8"	4'-6"
GR 60	TOP BAR*	45 DIA, MIN 2'-0"	3'-8"	4'-9"	6'-0"	7'-8"	9'-6"
	OTHER BAR	32 DIA, MIN 1'-6"	2'-8"	3'-6"	4'-4"	5'-6"	6'-9"

* TOP BARS SHALL BE DEFINED AS ANY HORIZONTAL BARS PLACED SUCH THAT MORE THAN 12" OF FRESH CONCRETE IS CAST IN THE MEMBER BELOW THE BAR, IN ANY SINGLE POUR. HORIZONTAL WALL BARS ARE CONSIDERED TOP BARS.

REGISTERED PROFESSIONAL ENGINEER No. 6888 SHERMAN M. PITKIN STATE OF UTAH

CH2M HILL

DSGN R.W. TOEBDEN
DR B.K. URTON
CHK S.M. PITKIN
APVD M.W. COLLINS

NO.	DATE	REVISION	BY	APVD

REUSE OF DOCUMENTS
THIS DOCUMENT, AND THE IDEAS AND DESIGNS INCORPORATED HEREIN, AS AN INSTRUMENT OF PROFESSIONAL SERVICE, IS THE PROPERTY OF CH2M HILL AND IS NOT TO BE USED, IN WHOLE OR IN PART, FOR ANY OTHER PROJECT WITHOUT THE WRITTEN AUTHORIZATION OF CH2M HILL.
©CH2M HILL, INC.

BAR IS ONE INCH ON ORIGINAL DRAWING. 0 — 1" IF NOT ONE INCH ON THIS SHEET, ADJUST SCALES ACCORDINGLY.

Utah Lake Jordan River Flood Management Program

DIVERSION STRUCTURES COMMON SHEETS

DESIGN DETAILS

SHEET 2
DATE DEC. 1984
PROJ NO. B18331.F1

NOTE: NOT ALL DESIGN DETAILS APPLY TO EACH SCHEDULE

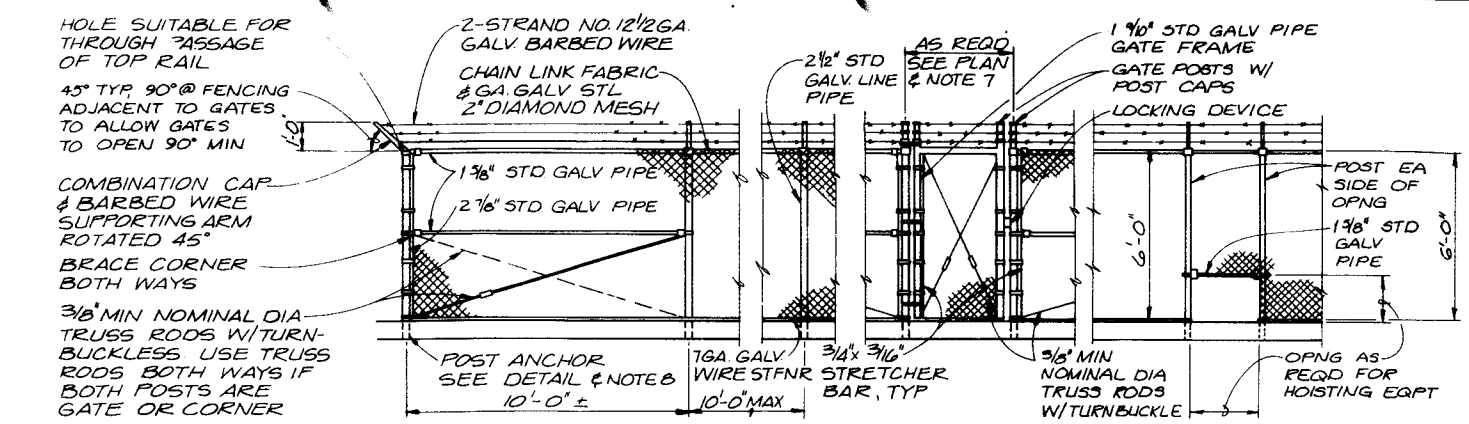

NOTES

1. ALL PIPE DIAMETERS SHOWN ARE STEEL PIPE SIZES, STANDARD WEIGHT, NOMINAL DIAMETER.
2. CHAIN LINK FABRIC SHALL BE ATTACHED TO FENCE FRAME WORK IN ACCORDANCE WITH THE MANUFACTURERS STANDARD INSTRUCTIONS
3. BARBED WIRE GUARD TO BE MOUNTED VERTICALLY ON ALL GATE POSTS.
4. BARBED WIRE SUPPORTING ARMS SHALL CONFORM WITH MANUFACTURER'S STANDARDS AND SHALL BE WELDED IN PLACE OR OTHERWISE SECURED TO PREVENT ROTATION
5. FORM BLOCKOUT FOR POSTS IN CONCRETE WALL WITH 1'-0" LONG GALVANIZED SLEEVE. SET FLUSH WITH WALL. PLACE POST AND FILL GAP WITH NON-SHRINK GROUT.
6. ANCHOR POSTS IN SOIL IN 2' DIAMETER, 3' DEEP CONCRETE.
7. DOUBLE GATE IF OVER 4'-0" WIDE.
8. CENTER POST ANCHOR IN WALL UNLESS INDICATED OTHERWISE. MINIMUM 6" ℄ POST/EDGE DISTANCE.

CHAIN LINK FENCE (10)

NTS

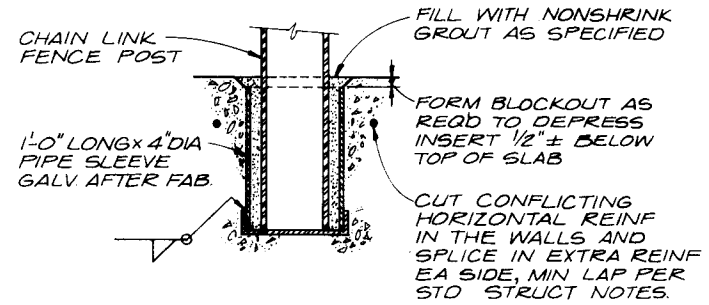

POST ANCHORAGE DETAIL

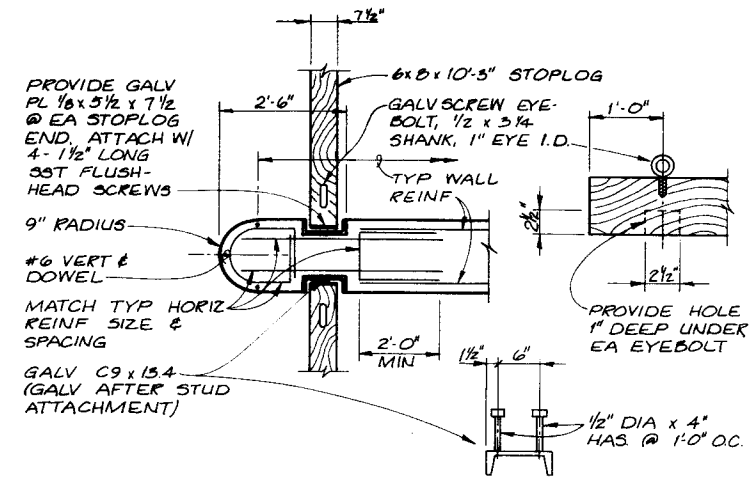

REINFORCING, CHANNEL GUIDE AND STOPLOG (13)

NTS

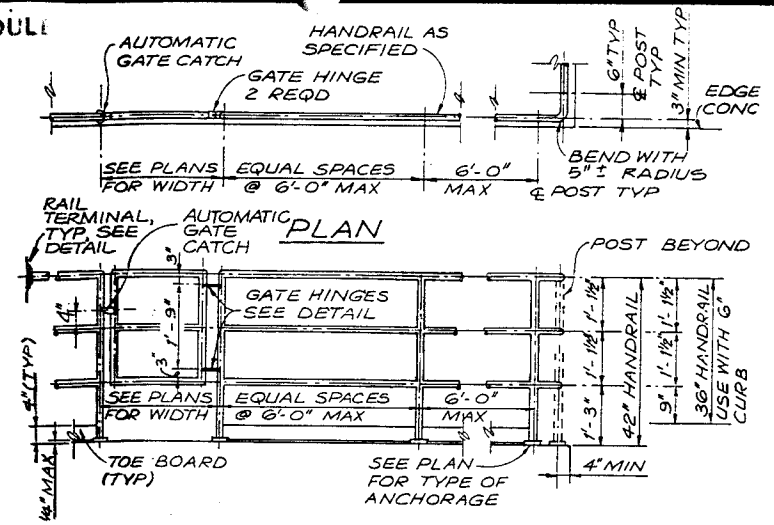

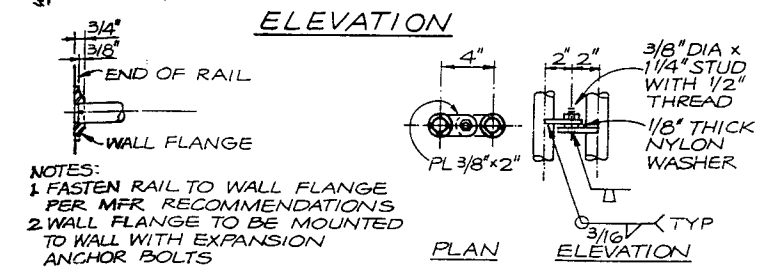

NOTES:
1. FASTEN RAIL TO WALL FLANGE PER MFR RECOMMENDATIONS
2. WALL FLANGE TO BE MOUNTED TO WALL WITH EXPANSION ANCHOR BOLTS

RAIL TERMINAL — HINGE

TYPICAL HANDRAIL (16)

NTS

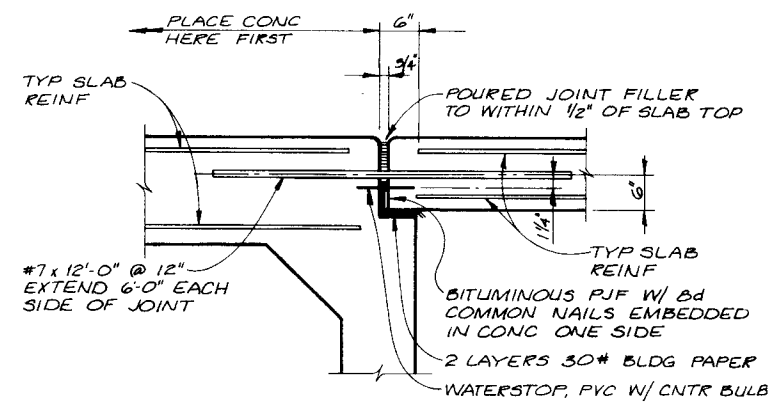

EXPANSION JOINT DETAIL (14)

NTS

NOTE:
BASE PL METAL SHALL MATCH HANDRAIL, PROVIDE PROTECTION FOR DISSIMILAR METALS AND CONCRETE PER SPECIFICATIONS.

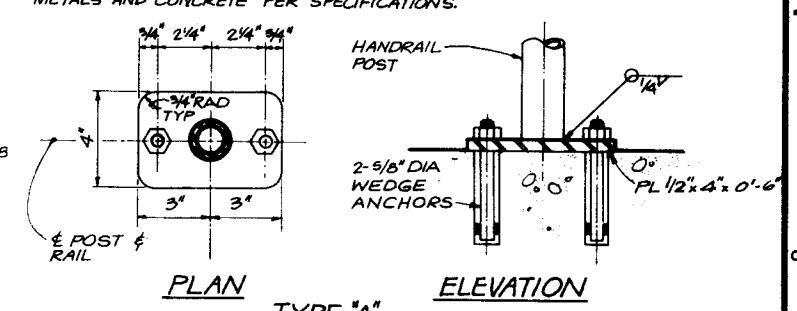

TYPE "A"

HANDRAIL POST ANCHORAGE (17)

NTS

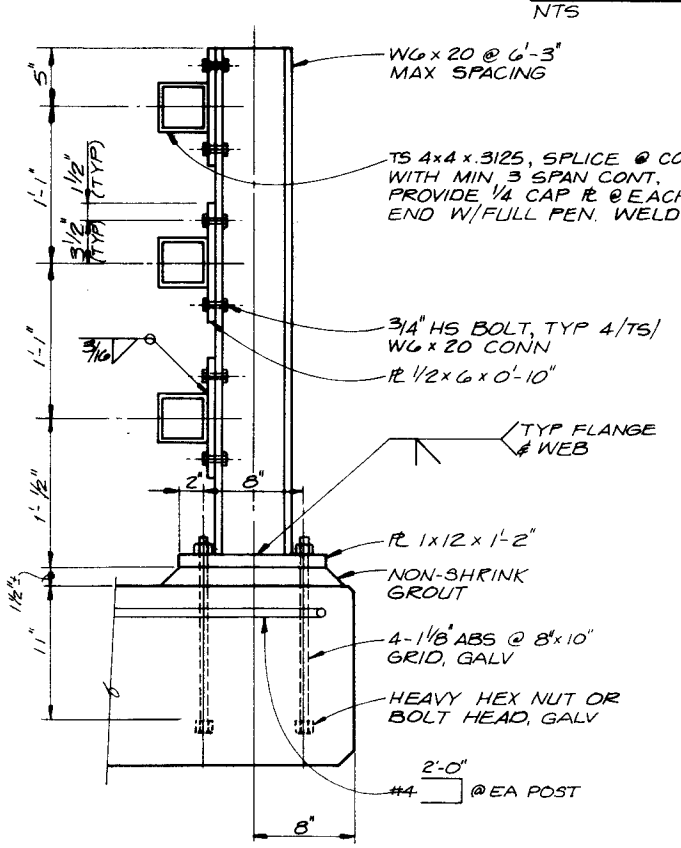

GUARDRAIL (11)

1½" = 1'-0"

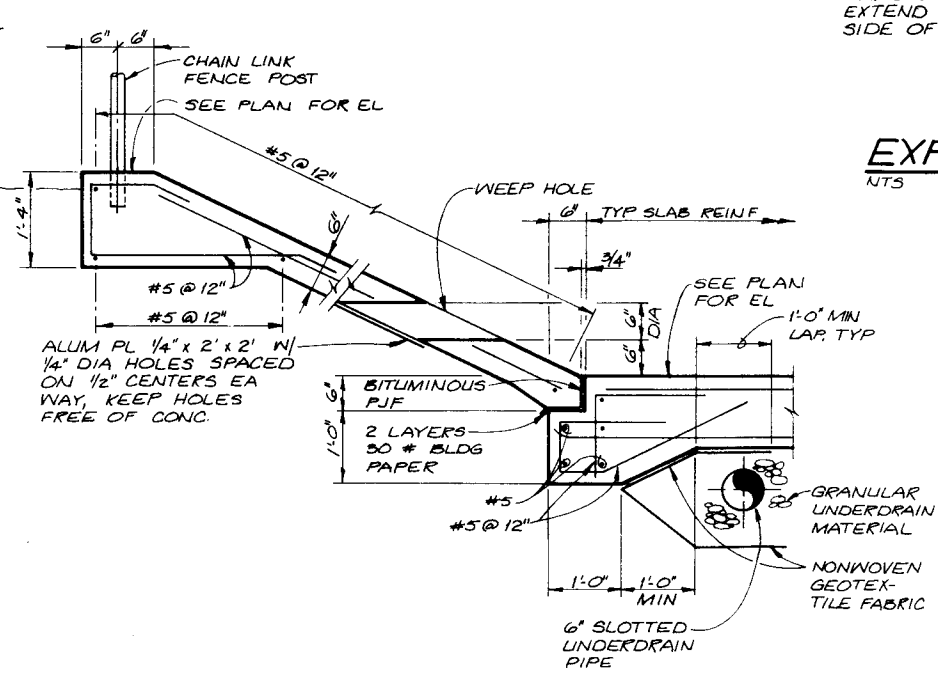

SECTION THRU SLOPED CONCRETE SLAB (12)

¾" = 1'-0"

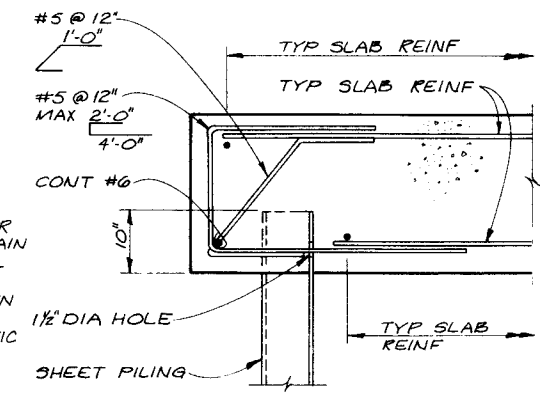

SHEET PILE/ CONCRETE SLAB (15)

NTS

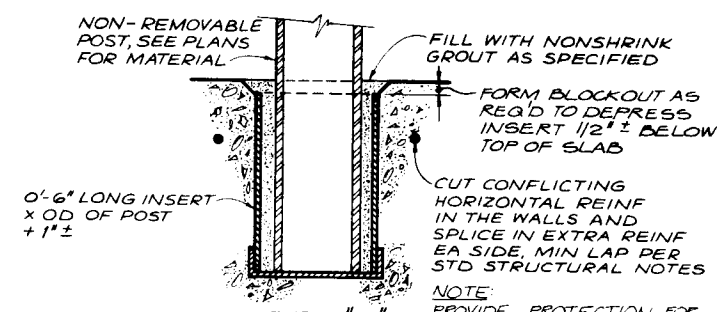

TYPE "C"

NOTE:
PROVIDE PROTECTION FOR DISSIMILAR METALS & CONCRETE PER SPECS.

HANDRAIL POST ANCHORAGE (18)

NTS

REGISTERED PROFESSIONAL ENGINEER No. 6888 SHERRIE W. PITKIN STATE OF UTAH

CH2M HILL	DSGN R.W. TOEDDEN DR R.E. BROWN CHK S.M. PITKIN APVD M.W. COLLINS	NO.	DATE	REVISION	BY / APVD

REUSE OF DOCUMENTS
THIS DOCUMENT, AND THE IDEAS AND DESIGNS INCORPORATED HEREIN, AS AN INSTRUMENT OF PROFESSIONAL SERVICE, IS THE PROPERTY OF CH2M HILL AND IS NOT TO BE USED, IN WHOLE OR IN PART, FOR ANY OTHER PROJECT WITHOUT THE WRITTEN AUTHORIZATION OF CH2M HILL.
©CH2M HILL, INC.

VERIFY SCALES
BAR IS ONE INCH ON ORIGINAL DRAWING.
0 1"
IF NOT ONE INCH ON THIS SHEET, ADJUST SCALES ACCORDINGLY.

Utah Lake Jordan River Flood Management Program

DIVERSION STRUCTURES COMMON SHEETS

DESIGN DETAILS

SHEET 3
DATE DEC. 1984
PROJ NO. B18331.F1

NOTE: NOT ALL DESIGN DETAILS APPLY TO EACH SCHEDULE

NOTE: WELD STEEL & STAINLESS STEEL AS SHOWN. PROVIDE A SPECIAL CONN FOR ALUMINUM THAT WILL DEVELOP FULL STRENGTH OF PIPE. SUBMIT TEST DATA ON SHOP DWGS FOR REVIEW

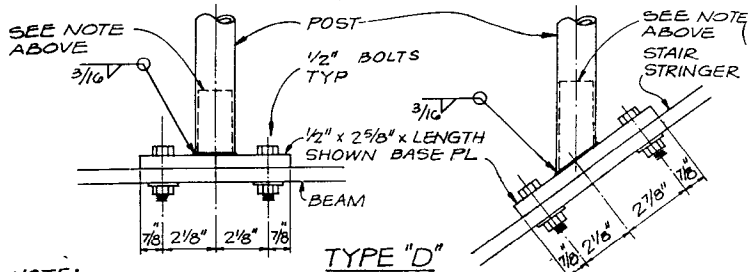

NOTE:
BOLT MATL & BASE PLATE SHALL BE AS SPECIFIED & SHALL MATCH HANDRAIL MATL, PROVIDE PROTECTION FOR DISSIMILAR METALS AND CONCRETE PER SPECIFICATIONS.

HANDRAIL POST ANCHORAGE (19)
NTS

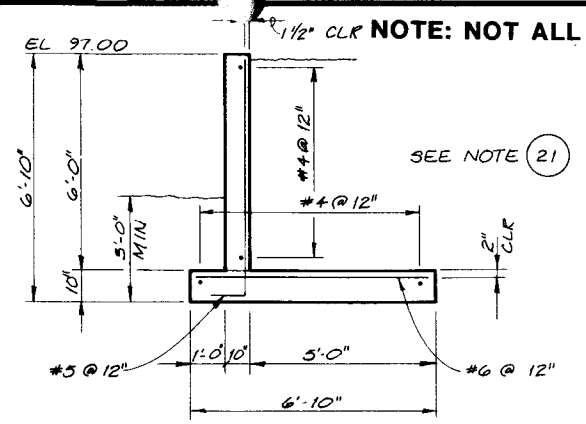

RETAINING WALL TYPE 2 (22)
NTS

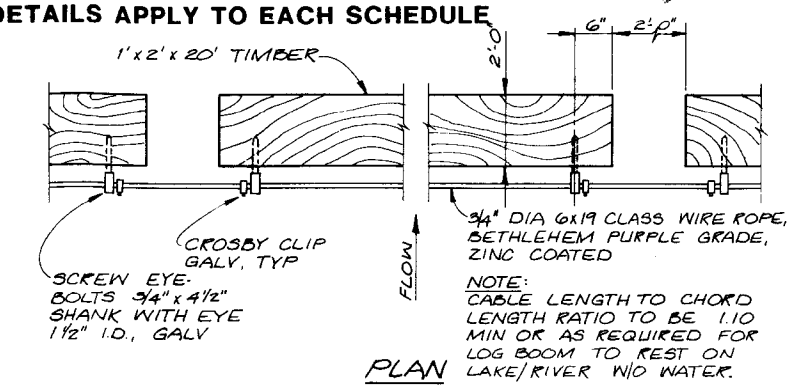

LOG BOOM (25)
NTS

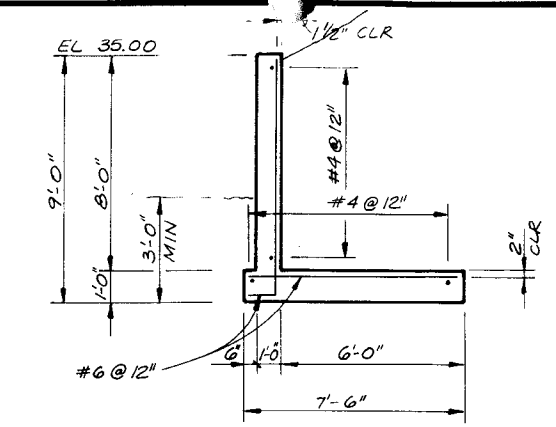

RETAINING WALL TYPE 4 (28)
NTS

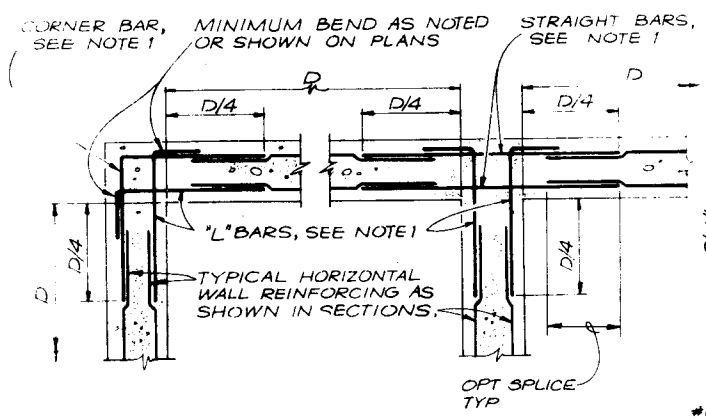

NOTES:

1. SEE SECTIONS FOR SIZE AND SPACING OF TYPICAL WALL HORIZONTAL REINF.
2. SPLICE LENGTHS AND BENDS SHALL BE AS INDICATED ON PLANS OR AS NOTED IN GENERAL STRUCTURAL NOTES.
3. D/4 = BAR LENGTH EXCEPT WHERE INDICATED OTHERWISE ON PLANS.
4. D = LENGTH OF WALL PARALLEL TO BAR LENGTH IN QUESTION OR HEIGHT OF WALL PARALLEL TO BAR LENGTH IN QUESTION, WHICHEVER IS LESS.

CORNER AND INTERSECTION REINFORCING (20)
NTS

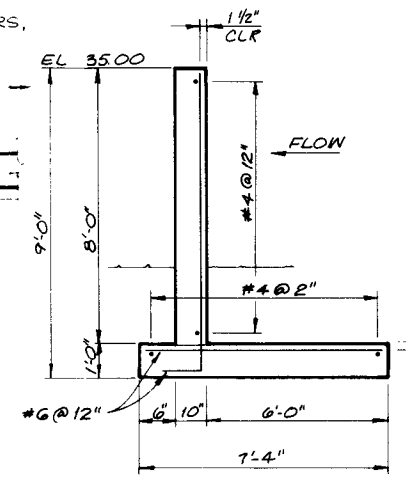

CUT OFF WALL

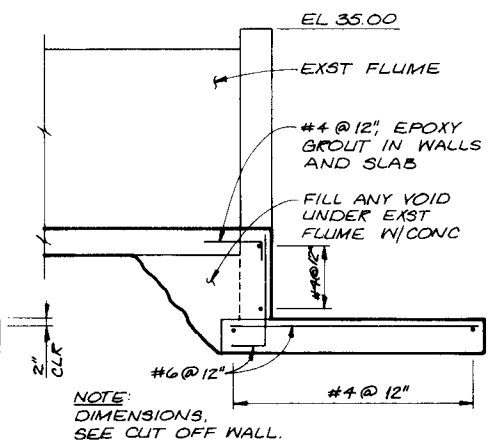

WALL AT EXST FLUME

RETAINING WALLS TYPE 3 (23)
3/8" = 1'-0"

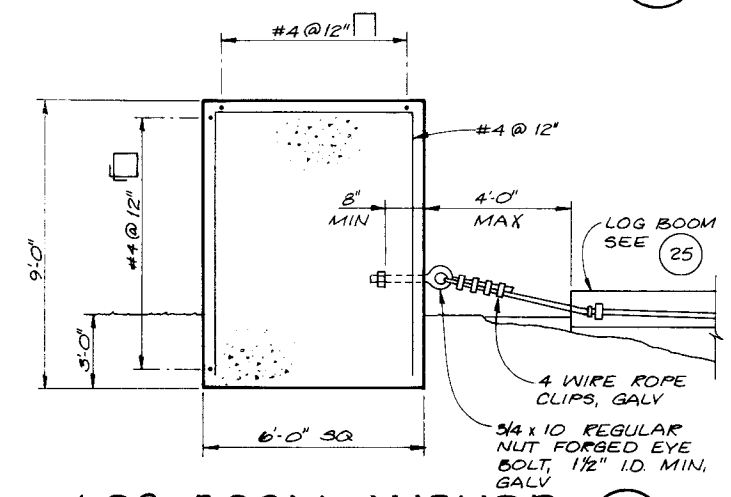

LOG BOOM ANCHOR (26)
NTS

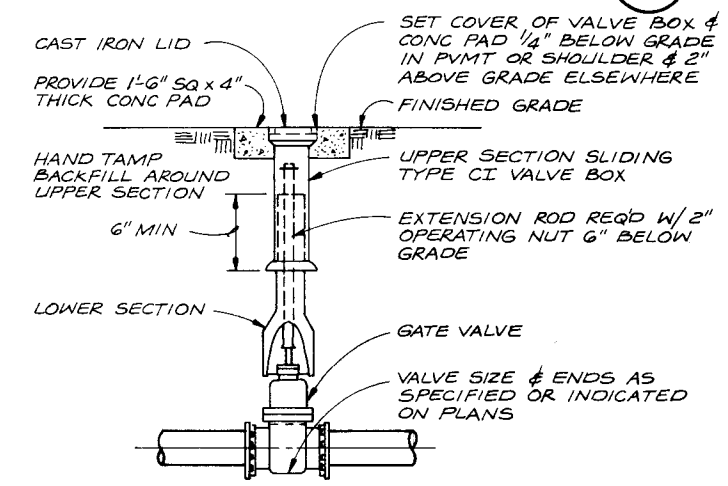

BURIED GATE VALVE BOX SETTING (29)
NTS

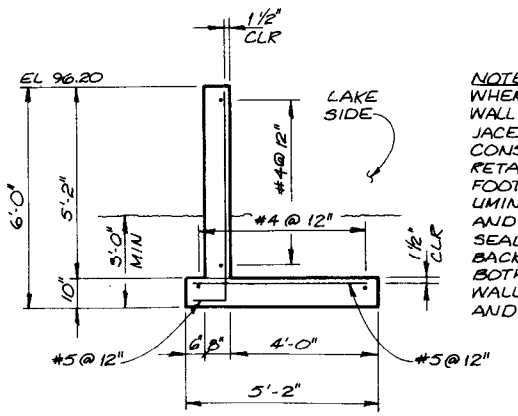

NOTE:
WHERE RETAINING WALL ENDS ADJACENT TO EXST CONST; ISOLATE RETAINING WALL/FOOTING W/ BITUMINOUS PJF AND PROVIDE SEALANT W/ BACKER ROD BOTH SIDES OF WALL, FULL HEIGHT, AND WALL TOP.

RETAINING WALL TYPE 1 (21)
NTS

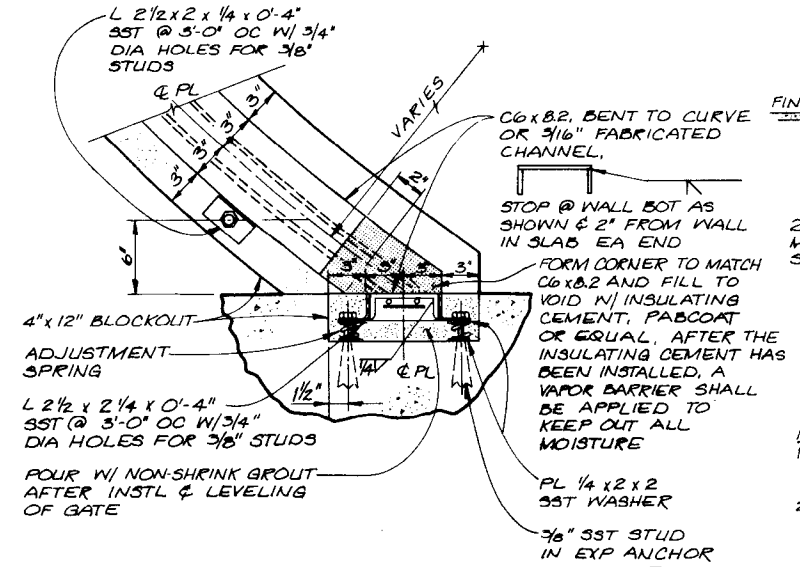

RADIAL GATE SEAL (24)
NTS

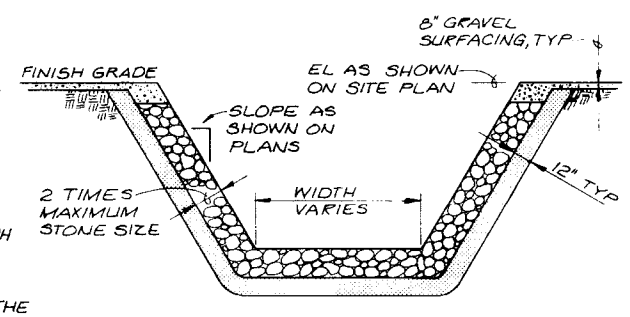

TYPICAL CHANNEL RIP RAP

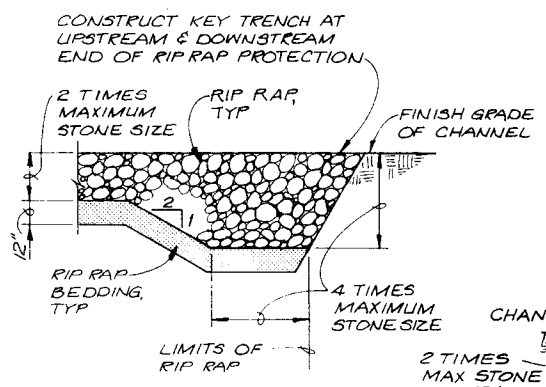

TYPICAL RIP RAP KEY TRENCH

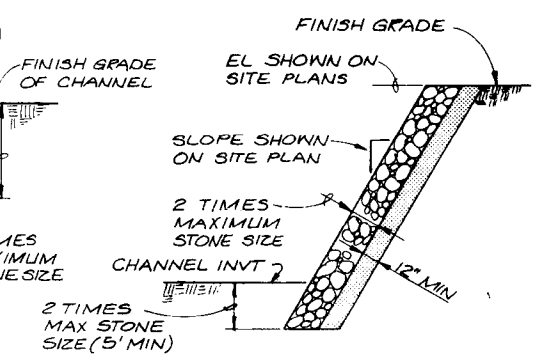

BANK RIP RAP

NOTES

1. FINISH GRADE OF RIP RAP TO BE CONSTRUCTED FLUSH WITH CHANNEL SECTION.
2. SEE SITE PLANS FOR RIP RAP SIZE (D50)

RIP RAP DETAILS (27)
NTS

REGISTERED PROFESSIONAL ENGINEER No. 6388 STEPHEN M. PITKIN 12-6-84 STATE OF UTAH

CH2M HILL

DSGN	R.W. TOEBBEN
DR	R.E. BROWN
CHK	S.M. PITKIN
APVD	M.W. COLLINS

NO.	DATE	REVISION	BY	APVD

REUSE OF DOCUMENTS
THIS DOCUMENT, AND THE IDEAS AND DESIGNS INCORPORATED HEREIN, AS AN INSTRUMENT OF PROFESSIONAL SERVICE, IS THE PROPERTY OF CH2M HILL AND IS NOT TO BE USED, IN WHOLE OR IN PART, FOR ANY OTHER PROJECT WITHOUT THE WRITTEN AUTHORIZATION OF CH2M HILL.
©CH2M HILL, INC.

VERIFY SCALES
BAR IS ONE INCH ON ORIGINAL DRAWING.
0 1"
IF NOT ONE INCH ON THIS SHEET, ADJUST SCALES ACCORDINGLY.

Utah Lake Jordan River Flood Management Program

DIVERSION STRUCTURES - COMMON SHEETS

DESIGN DETAILS

SHEET 4
DATE DEC. 1984
PROJ NO. B18331.F1

CURVE DATA

CURVE NO.	Δ	RADIUS
C-1	45°10'	285.00'
C-2	38°20'	70.00'
C-3	45°10'	220.00'
C-4	46°50'	132.00'

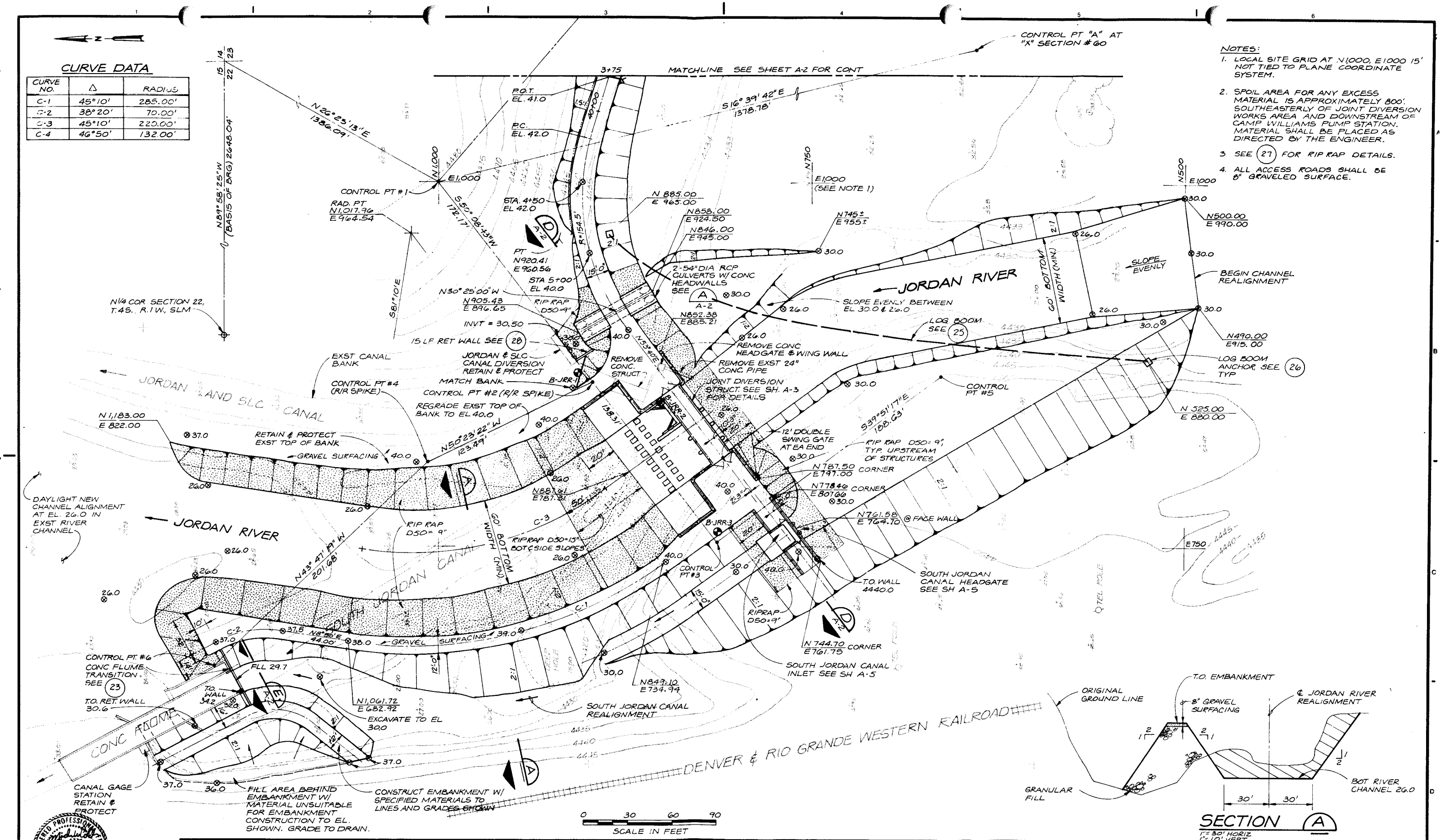

NOTES:

1. LOCAL SITE GRID AT N1000, E1000 15' NOT TIED TO PLANE COORDINATE SYSTEM.
2. SPOIL AREA FOR ANY EXCESS MATERIAL IS APPROXIMATELY 800' SOUTHEASTERLY OF JOINT DIVERSION WORKS AREA AND DOWNSTREAM OF CAMP WILLIAMS PUMP STATION. MATERIAL SHALL BE PLACED AS DIRECTED BY THE ENGINEER.
3. SEE 27 FOR RIP RAP DETAILS.
4. ALL ACCESS ROADS SHALL BE 8" GRAVELED SURFACE.

REGISTERED PROFESSIONAL ENGINEER No. 6778 MICHAEL W. COLLINS 12/18/84 STATE OF UTAH

CH2M HILL

DSGN	L.A GROSS/M.P LAVEY
DR	L.E. WILLIAMS
CHK	L.R. TAYLOR
APVD	M.W. COLLINS

NO.	DATE	REVISION	BY	APVD

REUSE OF DOCUMENTS

THIS DOCUMENT, AND THE IDEAS AND DESIGNS INCORPORATED HEREIN, AS AN INSTRUMENT OF PROFESSIONAL SERVICE, IS THE PROPERTY OF CH2M HILL AND IS NOT TO BE USED, IN WHOLE OR IN PART, FOR ANY OTHER PROJECT WITHOUT THE WRITTEN AUTHORIZATION OF CH2M HILL.

©CH2M HILL, INC.

VERIFY SCALES

BAR IS ONE INCH ON ORIGINAL DRAWING.
0 1"
IF NOT ONE INCH ON THIS SHEET, ADJUST SCALES ACCORDINGLY.

Utah Lake Jordan River Flood Management Program

DIVERSION STRUCTURES-SCHEDULE A
JOINT DIVERSION STRUCTURE

SITE PLAN

SHEET A-1
DATE DEC. 1984
PROJ NO. B18331.F1

NOTES:

1. ELEVATION SHOWN IS FINISH GRADE TOP OF GRAVEL ROAD.
2. BEGINING STATION MAY BE FIELD ADJUSTED PRIOR TO CONSTRUCTION AS FIELD CONDITIONS DICTATE. ROADWAY LENGTH WILL NOT CHANGE.
3. GRADE EVENLY BETWEEN DESIGNATED ROAD GRADES.

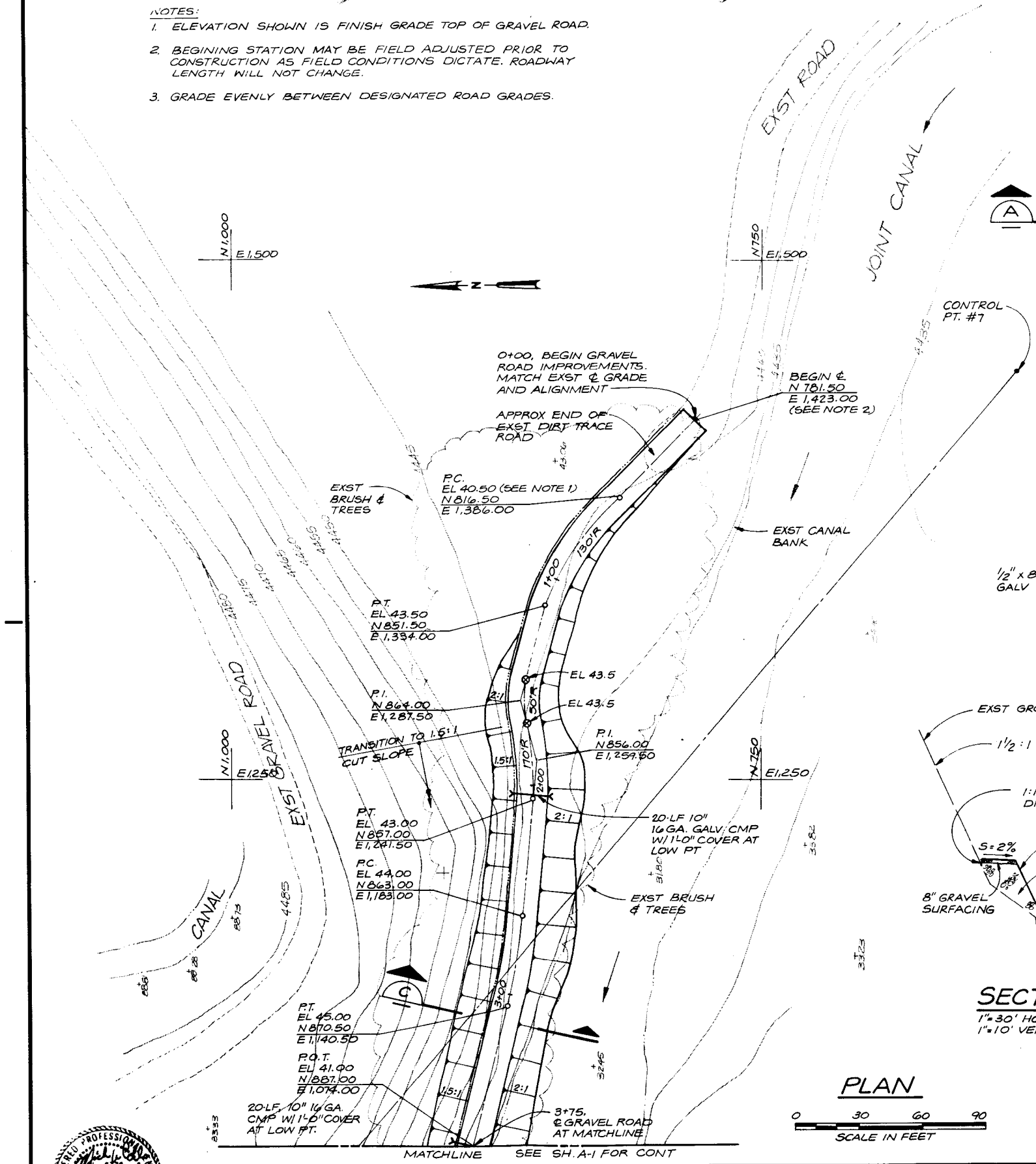

PLAN

0 30 60 90
SCALE IN FEET

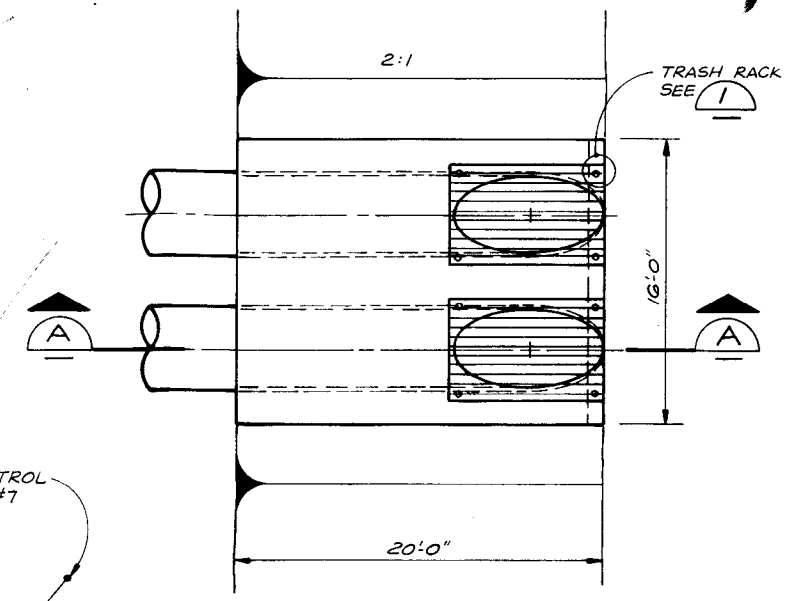

HEADWALL PLAN

3/16"=1'-0"

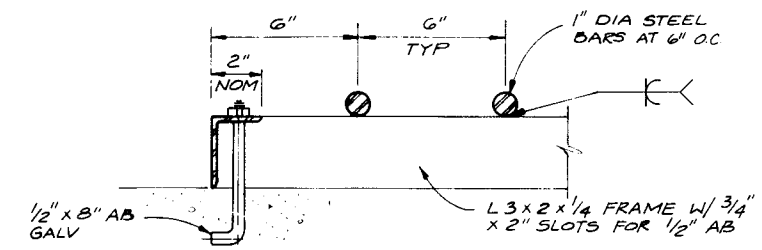

SECTION B

3"=1'-0"

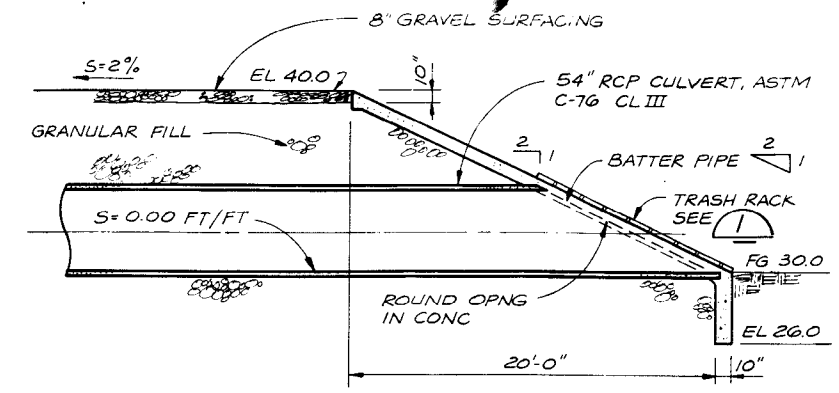

SECTION A

3/16"=1'-0"

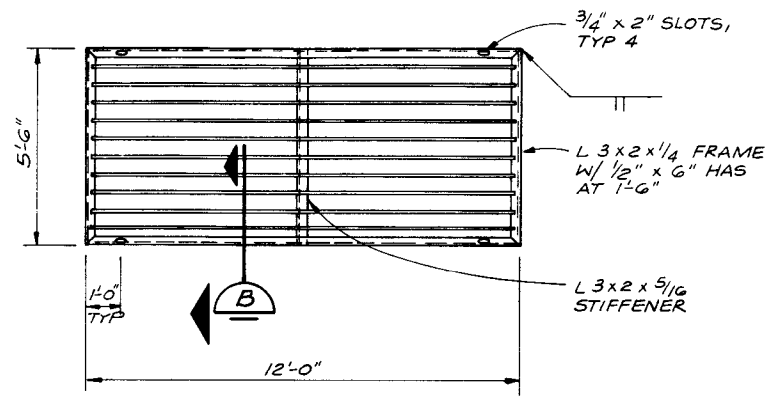

DETAIL 1

3/8"=1'-0"

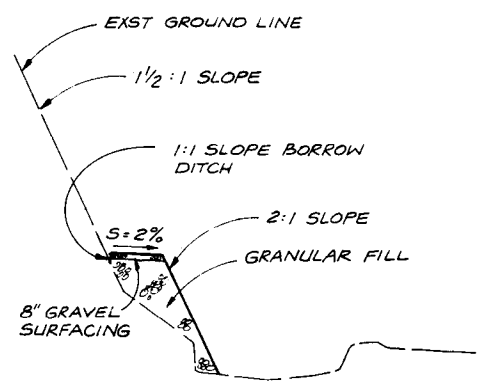

SECTION C

1"=30' HORIZ
1"=10' VERT

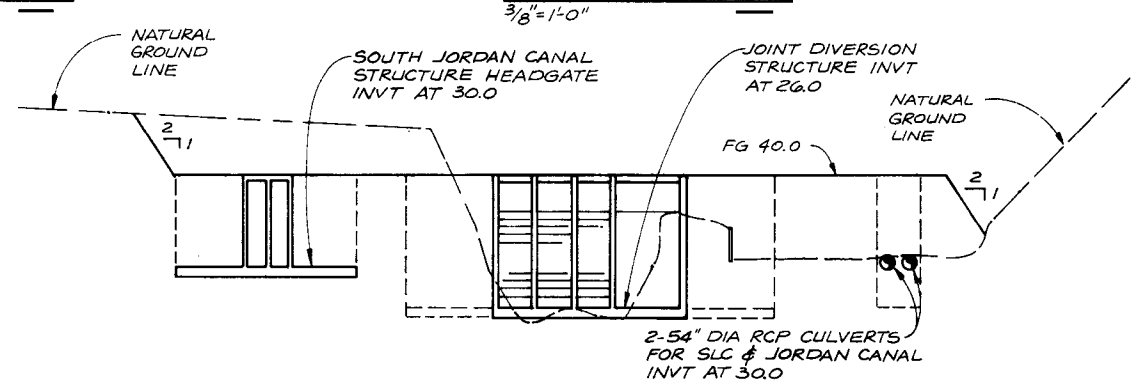

SECTION D

1"=30' HORIZ
1"=10' VERT

A-1

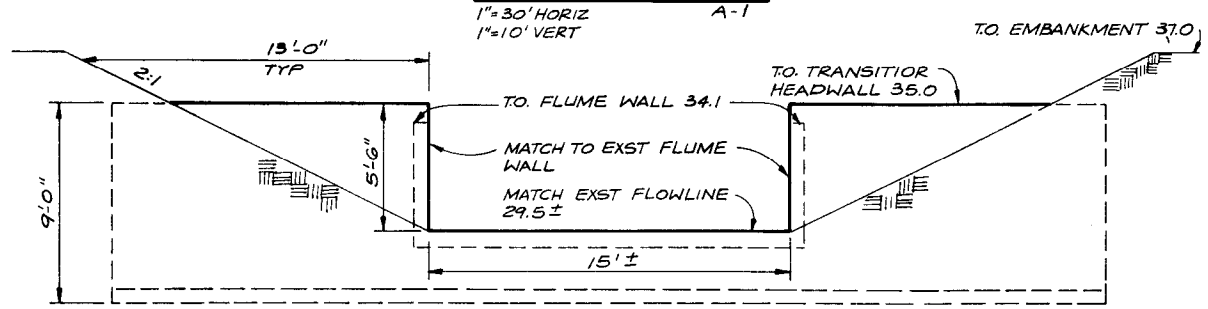

SECTION E

1"=4'

A-1

REGISTERED PROFESSIONAL ENGINEER
No. 6778
MICHAEL W. COLLINS
12/6/84
STATE OF UTAH

CH2M HILL					
DSGN M.P. LAVEY					
DR L.E. WILLIAMS					
CHK L.R. TAYLOR					
APVD M.W. COLLINS	NO.	DATE	REVISION	BY	APVD

REUSE OF DOCUMENTS

THIS DOCUMENT, AND THE IDEAS AND DESIGNS INCORPORATED HEREIN, AS AN INSTRUMENT OF PROFESSIONAL SERVICE, IS THE PROPERTY OF CH2M HILL AND IS NOT TO BE USED, IN WHOLE OR IN PART, FOR ANY OTHER PROJECT WITHOUT THE WRITTEN AUTHORIZATION OF CH2M HILL.

©CH2M HILL, INC.

VERIFY SCALES

BAR IS ONE INCH ON ORIGINAL DRAWING.
0 1"
IF NOT ONE INCH ON THIS SHEET, ADJUST SCALES ACCORDINGLY.

Utah Lake Jordan River
Flood Management Program

DIVERSION STRUCTURES-SCHEDULE A
JOINT DIVERSION STRUCTURE

SITE PLAN, SECTIONS AND DETAILS

SHEET	A-2
DATE	DEC. 1984
PROJ NO.	B18331.F1

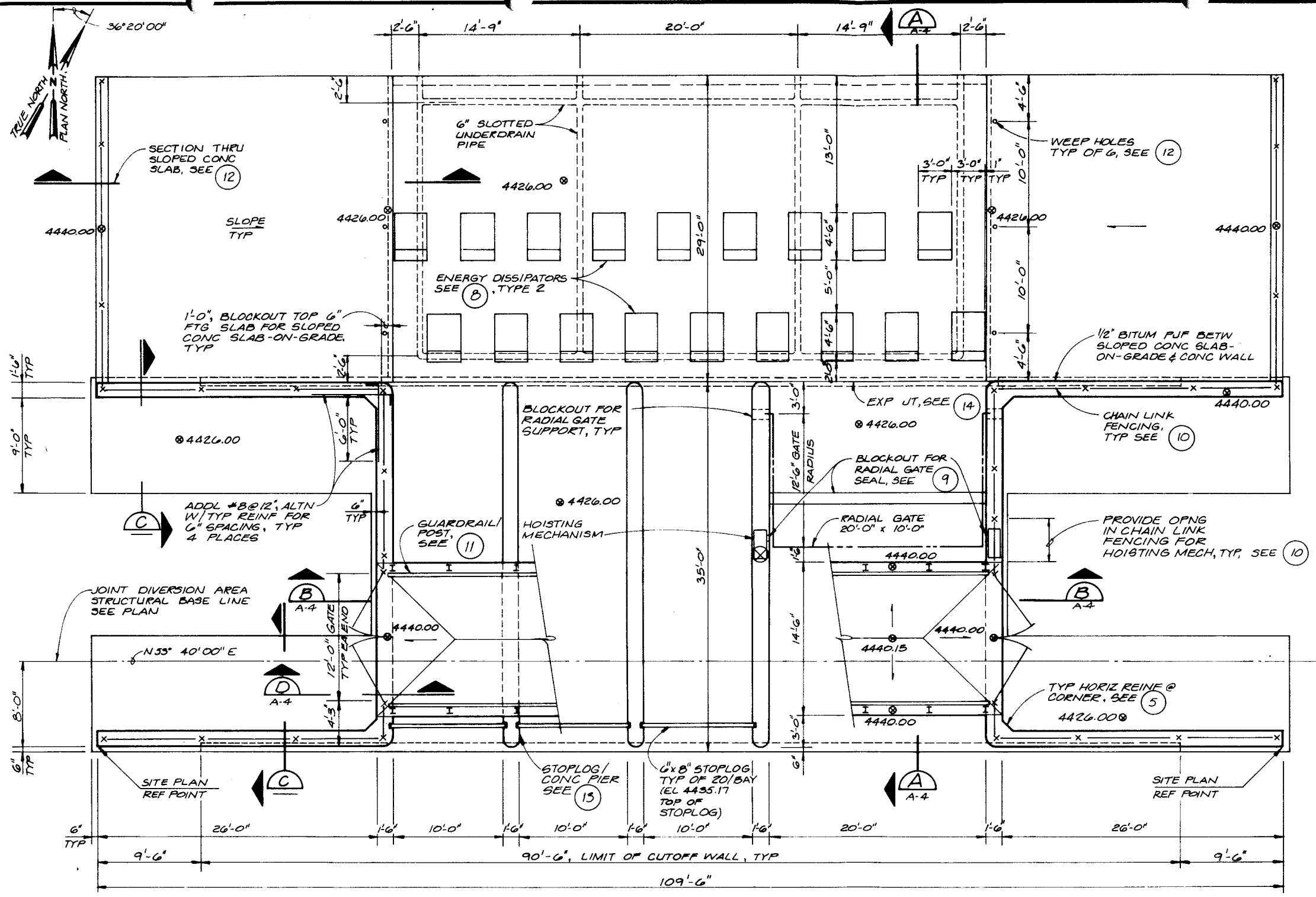

PLAN
3/16" = 1'-0"

GENERAL NOTES:

1. LOADS, STRUCTURE WEIGHT PLUS LIVE LOAD:
   ELEVATED SLAB: AASHTO HS 20 TRUCK
   SOIL (EQUIVALENT HYDROSTATIC PRESSURE)
   60 PCF, ABOVE GROUND WATER
   90 PCF, BELOW GROUND WATER
2. SEE SPECIFICATION 02200, EARTHWORK FOR SUBGRADE PREPARATION AND BACKFILL.
3. SEE GENERAL STRUCTUAL NOTES SHEET 2.
4. TO LIMIT DIFFERENTIAL SOIL PRESSURE, BACKFILL SHALL BE PLACED SUCH THAT SOIL LEVEL DIFFERENTIAL DOES NOT EXCEED 4 FEET BETWEEN OPPOSITE ENDS OF STRUCTURE OR AT ONE END OF STRUCTURE.
5. PROVIDE CONTINUOUS WATERSTOP AT SLAB/WINGWALL CONSTRUCTION JOINT, SLAB/ABUTMENT CONSTRUCTION JOINT, AND SLAB/CUTOFF WALL CONSTRUCTION JOINT.
6. CONTRACTOR SHALL COORDINATE ALL BLOCKOUTS, DIMENSIONS AND EMBEDDED PARTS FOR RADIAL GATE W/ RADIAL GATE MANUFACTURER.

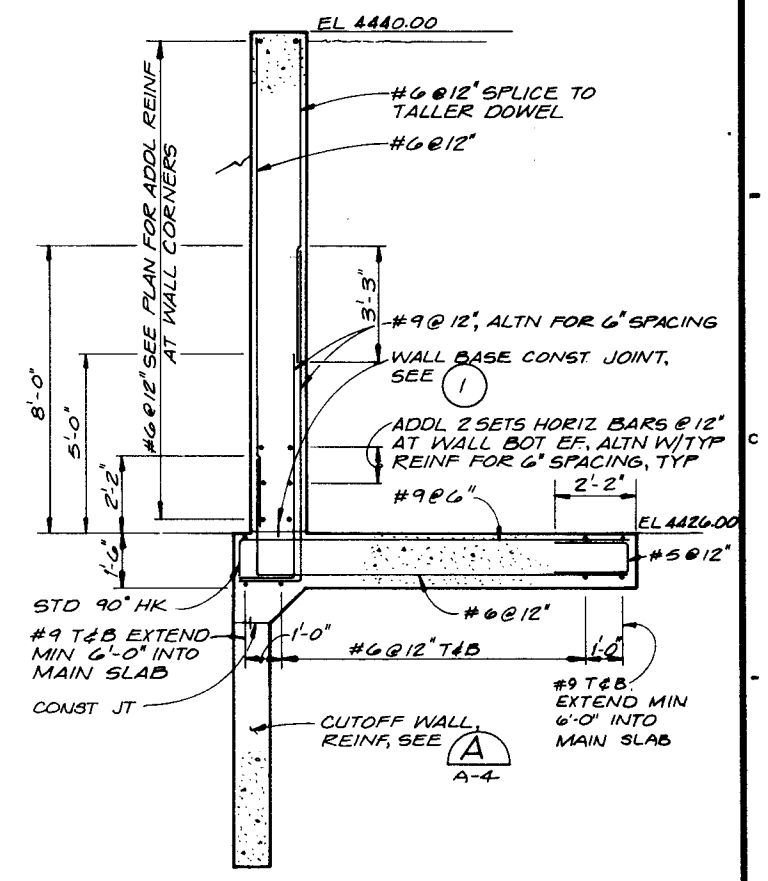

SECTION C A-4
3/8" = 1'-0"

REGISTERED PROFESSIONAL ENGINEER No. 6888 SHERRIE M. PITKIN STATE OF UTAH

CH2M HILL

DSGN	R.W. TOEBBEN
DR	L.E. WILLIAMS
CHK	S.M. PITKIN
APVD	M.W. COLLINS

NO.	DATE	REVISION	BY	APVD

REUSE OF DOCUMENTS
THIS DOCUMENT, AND THE IDEAS AND DESIGNS INCORPORATED HEREIN, AS AN INSTRUMENT OF PROFESSIONAL SERVICE, IS THE PROPERTY OF CH2M HILL AND IS NOT TO BE USED, IN WHOLE OR IN PART, FOR ANY OTHER PROJECT WITHOUT THE WRITTEN AUTHORIZATION OF CH2M HILL.
©CH2M HILL, INC.

VERIFY SCALES
BAR IS ONE INCH ON ORIGINAL DRAWING.
0 1"
IF NOT ONE INCH ON THIS SHEET, ADJUST SCALES ACCORDINGLY.

Utah Lake Jordan River Flood Management Program

DIVERSION STRUCTURES-SCHEDULE A
JOINT DIVERSION STRUCTURE
STRUCTURAL PLAN

SHEET A-3
DATE DEC. 1984
PROJ NO. B18331.F1

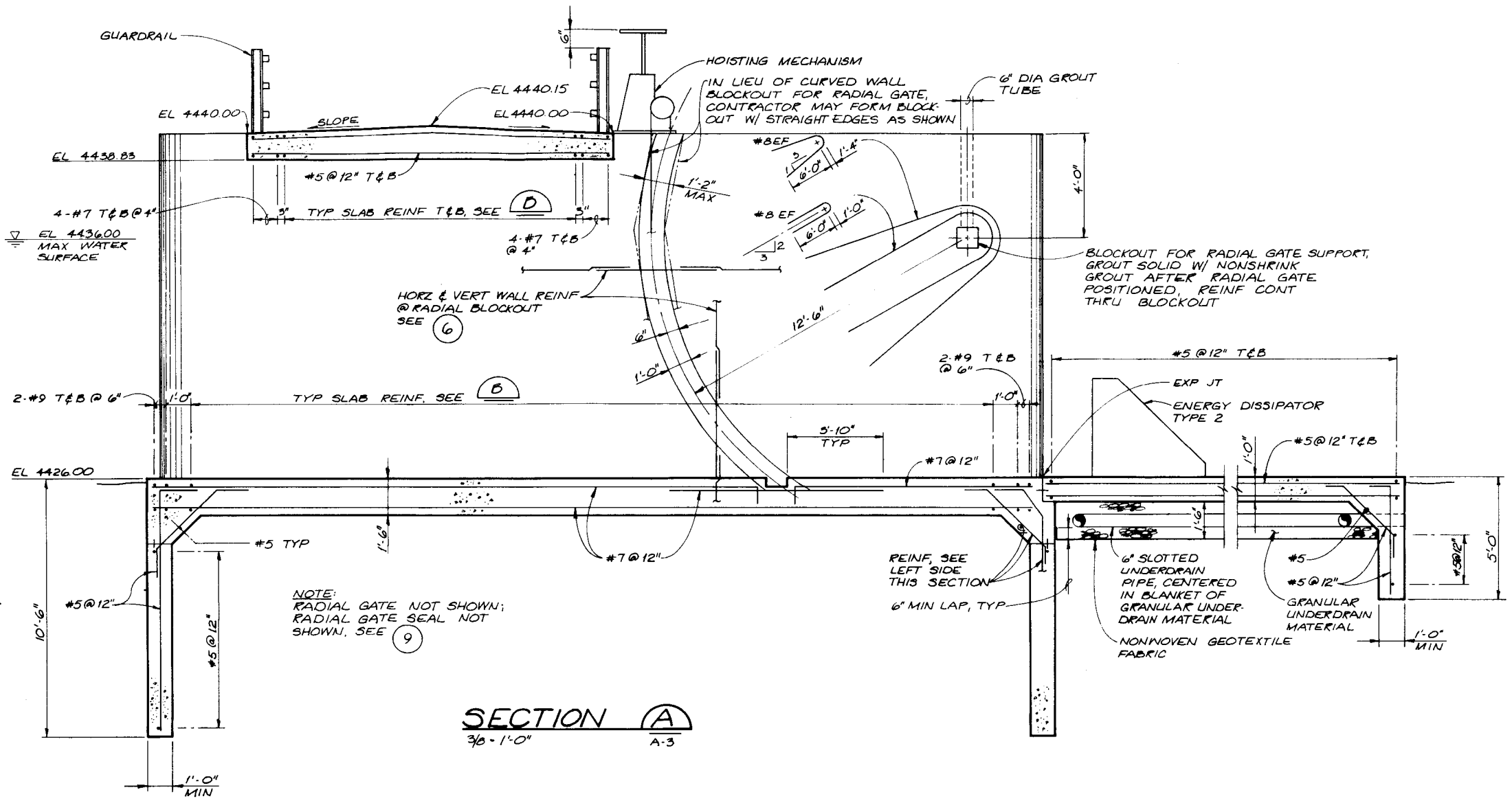

NOTE:
RADIAL GATE NOT SHOWN; RADIAL GATE SEAL NOT SHOWN, SEE 9

SECTION A
3/8" = 1'-0"
A-3

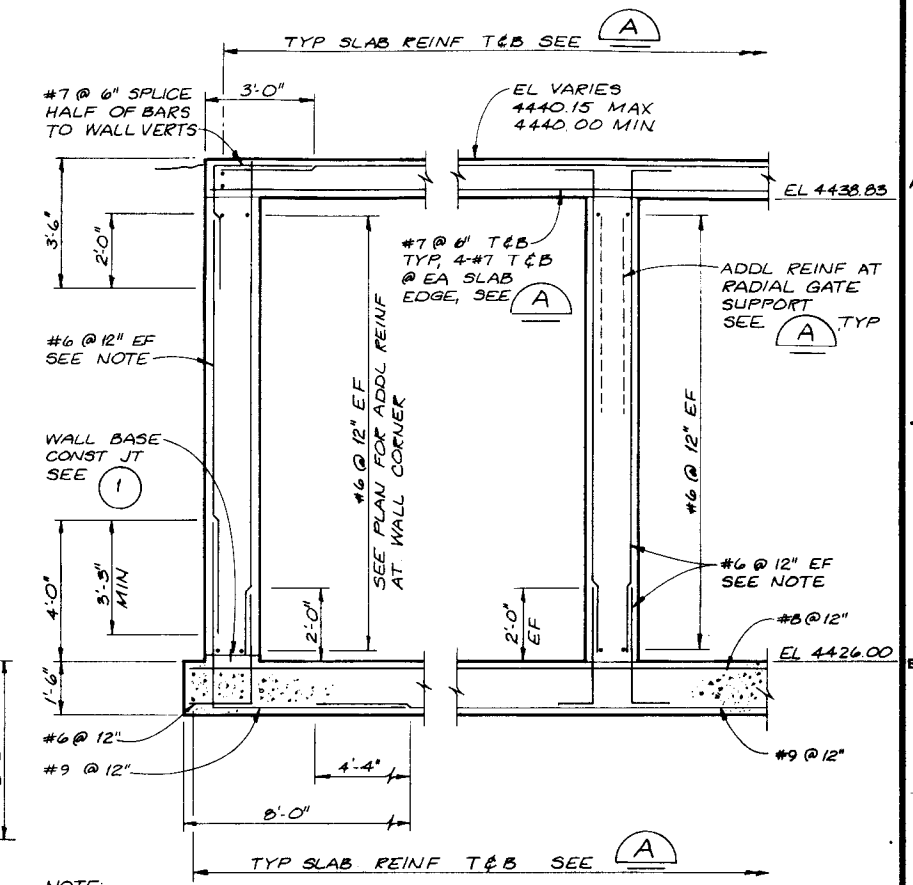

NOTE:
AT WALL SECTIONS W/O ELEVATED SLABS EXTEND TYP WALL VERTICAL REINFORCING TO WALL TOP.

SECTION B
3/8" = 1'-0"
A-3

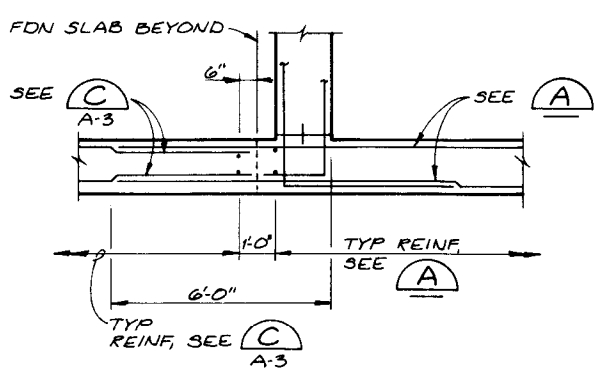

SECTION D
3/8" = 1'-0"
A-3

REGISTERED PROFESSIONAL ENGINEER No. 6888 STATE OF UTAH

CH2M HILL

DSGN R.W. TOEBBEN
DR R.E. BROWN
CHK S.M. PITKIN
APVD M.W. COLLINS

NO.	DATE	REVISION	BY	APVD

REUSE OF DOCUMENTS
THIS DOCUMENT, AND THE IDEAS AND DESIGNS INCORPORATED HEREIN, AS AN INSTRUMENT OF PROFESSIONAL SERVICE, IS THE PROPERTY OF CH2M HILL AND IS NOT TO BE USED, IN WHOLE OR IN PART, FOR ANY OTHER PROJECT WITHOUT THE WRITTEN AUTHORIZATION OF CH2M HILL.
©CH2M HILL, INC.

VERIFY SCALES
BAR IS ONE INCH ON ORIGINAL DRAWING.
0 1"
IF NOT ONE INCH ON THIS SHEET, ADJUST SCALES ACCORDINGLY.

Utah Lake Jordan River Flood Management Program

DIVERSION STRUCTURES - SCHEDULE A
JOINT DIVERSION STRUCTURE
STRUCTURAL SECTIONS

SHEET A-4
DATE DEC. 1984
PROJ NO. B18331.F1

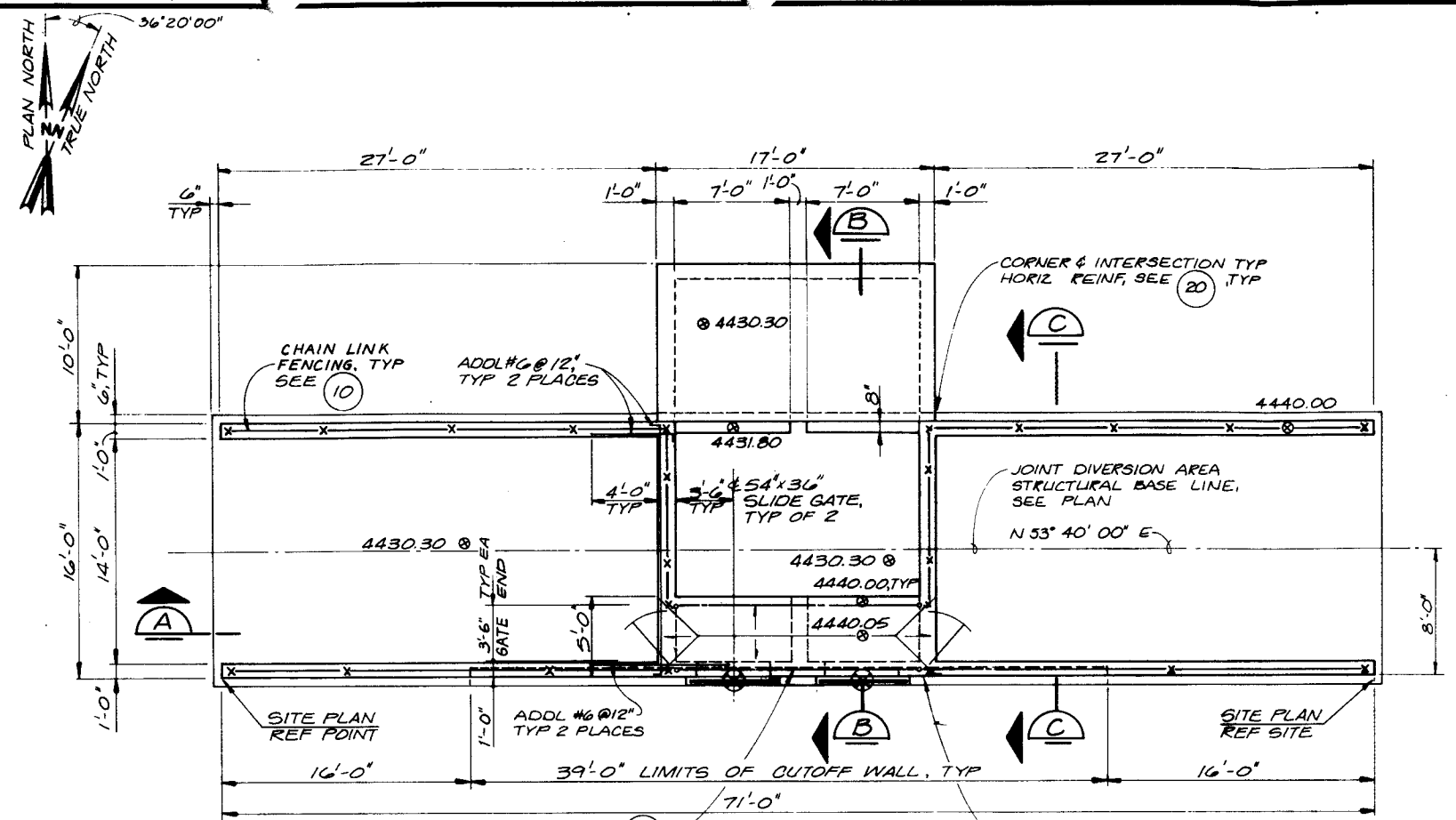

PLAN
3/16" = 1'-0"

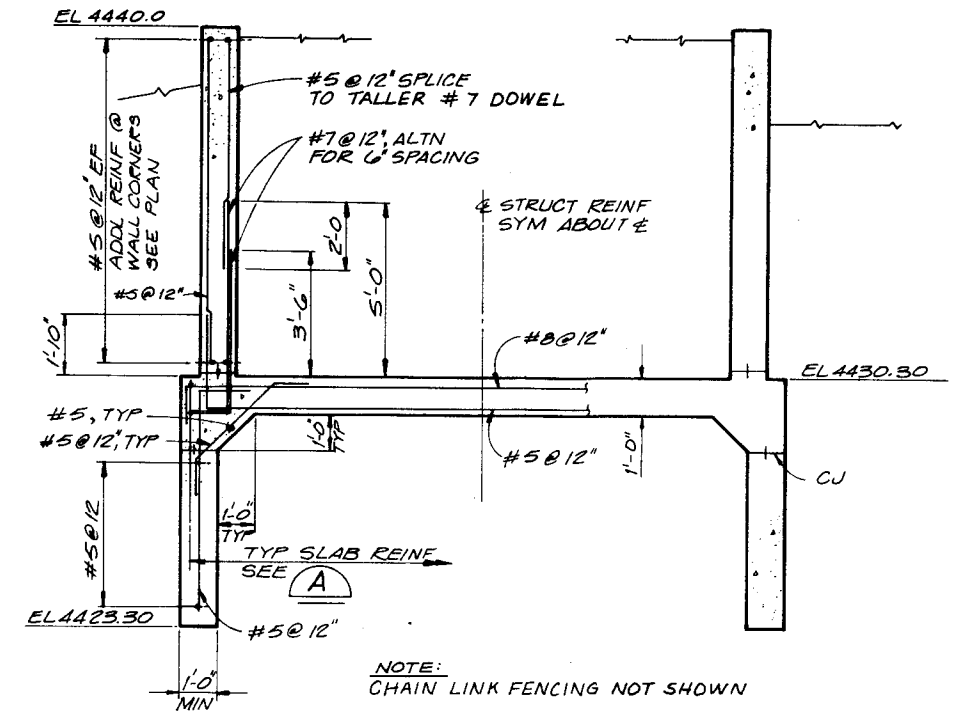

NOTE:
CHAIN LINK FENCING NOT SHOWN

SECTION C
3/8" = 1'-0"

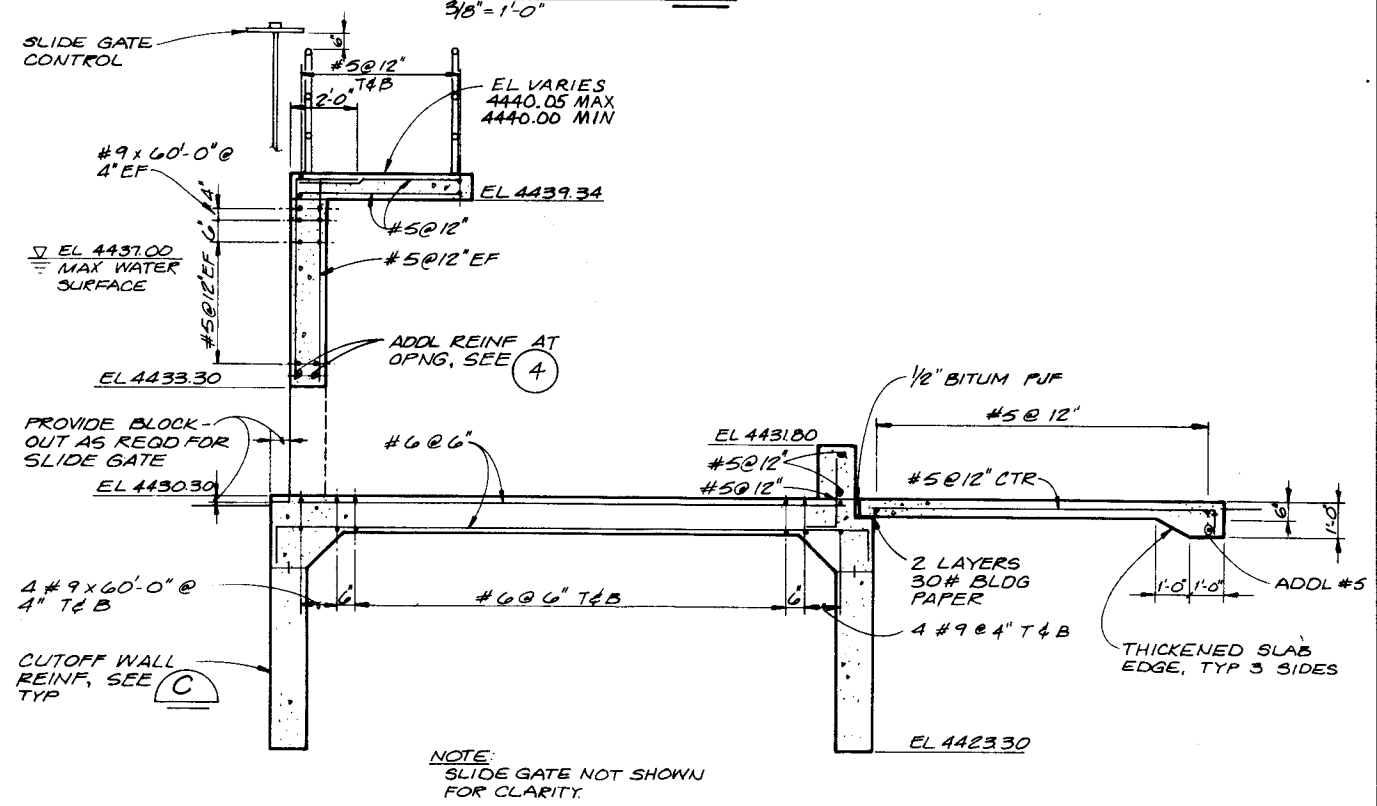

NOTE:
SLIDE GATE NOT SHOWN FOR CLARITY.

SECTION B
3/8" = 1'-0"

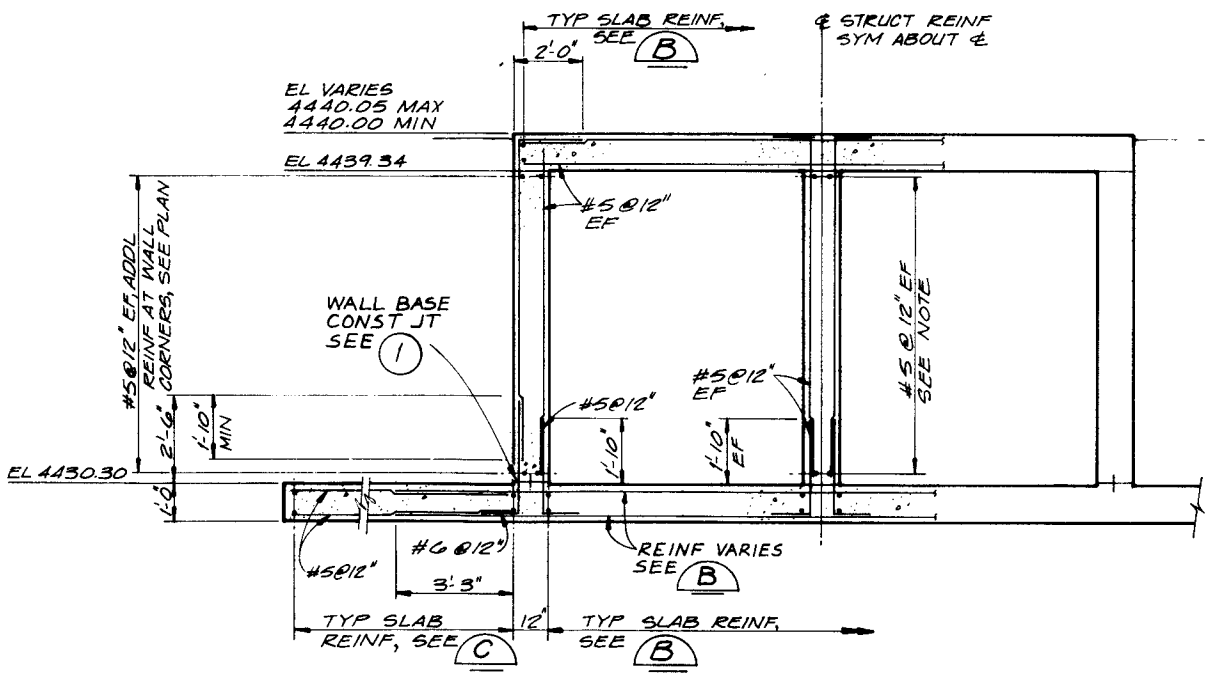

SECTION A
3/8" = 1'-0"

GENERAL NOTES:

1. LOADS, STRUCTURE WEIGHT PLUS LOAD:
   ELEVATED SLAB: 100 PSF
   SOIL (EQUIVALENT HYDROSTATIC PRESSURE)
   60 PCF ABOVE GROUND WATER
   90 PCF BELOW GROUND WATER
2. SEE GENERAL STRUCTURAL NOTES, SHEET 2.
3. PROVIDE CONTINUOUS WATERSTOP AT SLAB/WINGWALLS CONST JT, SLAB/ABUTMENT CONST JT, CUTOFF WALL/SLAB CONST JT.
4. CONTRACTOR SHALL COORDINATE ALL BLOCKOUTS, DIMENSIONS AND EMBEDDED PARTS FOR SLIDE GATE W/ SLIDE GATE MANUFACTURER
5. SEE SPECIFICATION 02200 EARTHWORK, FOR SUBGRADE PREPARATION AND BACKFILL REQUIREMENTS.

REGISTERED PROFESSIONAL ENGINEER No. 6900 PITKIN STATE OF UTAH

CH2M HILL

DSGN	R.W. TOEBBEN
DR	B. URTON
CHK	S.M. PITKIN
APVD	M.W. COLLINS

NO.	DATE	REVISION	BY	APVD

REUSE OF DOCUMENTS
THIS DOCUMENT, AND THE IDEAS AND DESIGNS INCORPORATED HEREIN, AS AN INSTRUMENT OF PROFESSIONAL SERVICE, IS THE PROPERTY OF CH2M HILL AND IS NOT TO BE USED, IN WHOLE OR IN PART, FOR ANY OTHER PROJECT WITHOUT THE WRITTEN AUTHORIZATION OF CH2M HILL.
©CH2M HILL, INC.

VERIFY SCALES
BAR IS ONE INCH ON ORIGINAL DRAWING.
0 1"
IF NOT ONE INCH ON THIS SHEET, ADJUST SCALES ACCORDINGLY.

Utah Lake Jordan River Flood Management Program

DIVERSION STRUCTURES-SCHEDULE A
JOINT DIVERSION STRUCTURE
SOUTH JORDAN STRUCTURAL

SHEET A-5
DATE DEC. 1984
PROJ NO. B18331.F1

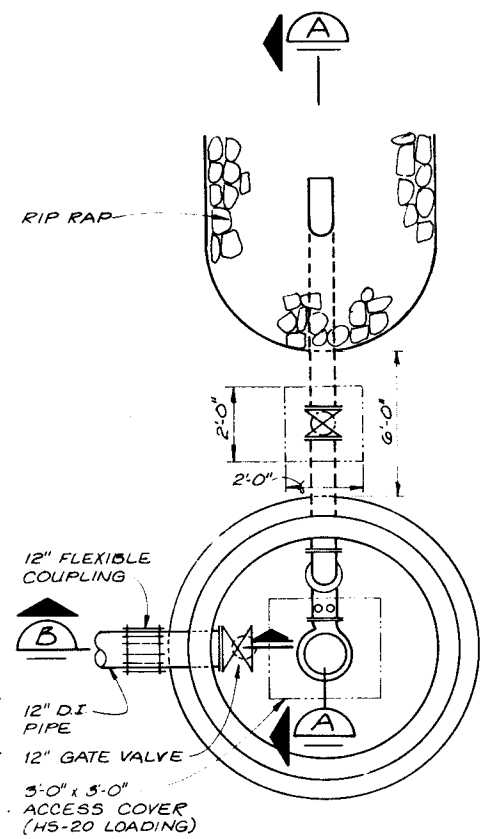

PLAN

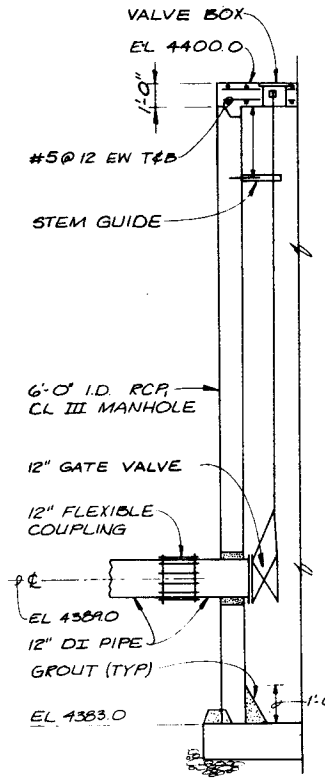

SECTION B

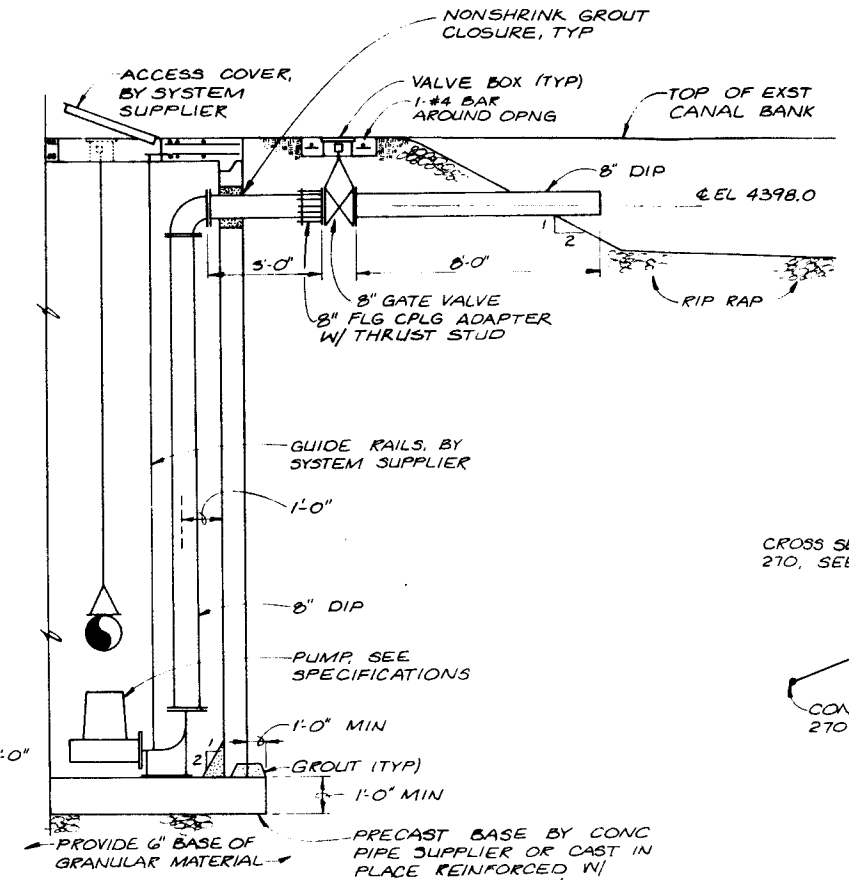

SECTION A

PUMP STATION

3/8" = 1'-0"

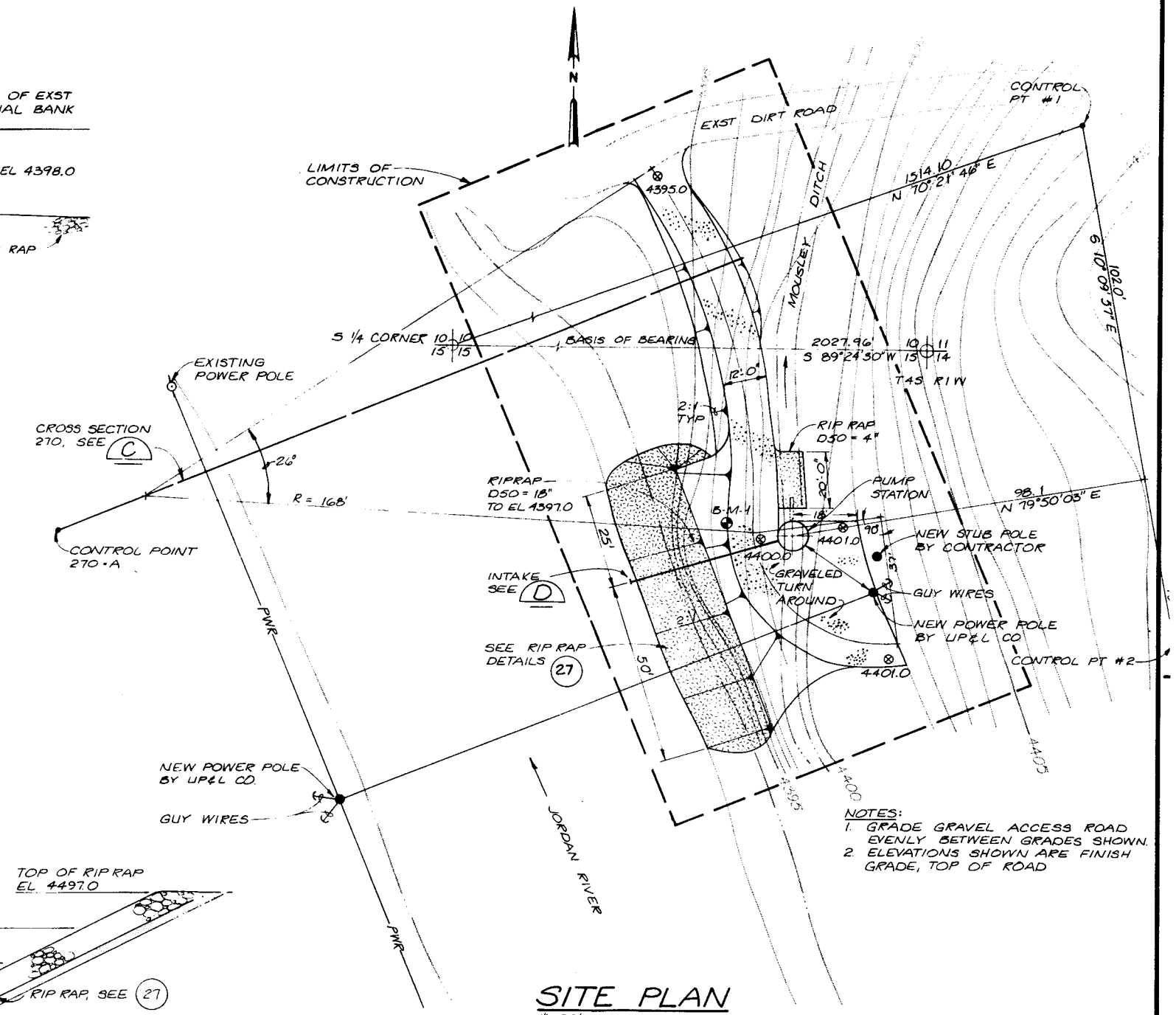

NOTES:
1. GRADE GRAVEL ACCESS ROAD EVENLY BETWEEN GRADES SHOWN.
2. ELEVATIONS SHOWN ARE FINISH GRADE, TOP OF ROAD

SITE PLAN

1" = 20'

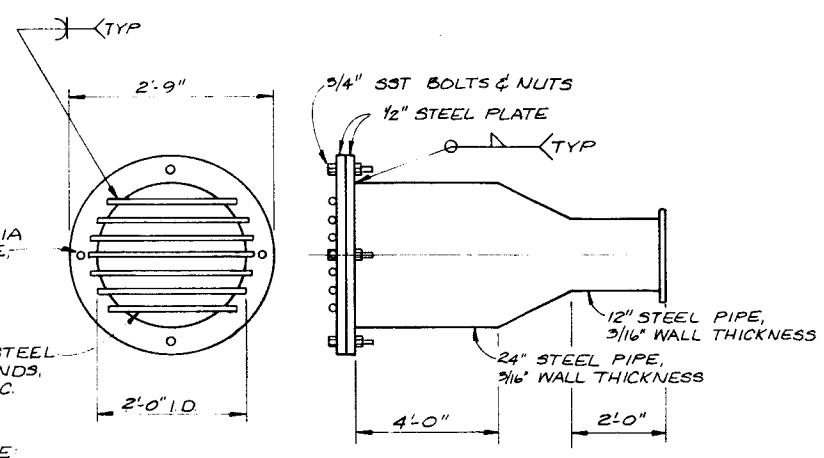

NOTE:
COAT ENTIRE INTAKE PIPE AND SCREEN WITH PAINTING SYTEM #1, SEE SPECIFICATIONS.

INTAKE SCREEN DETAIL D

NTS

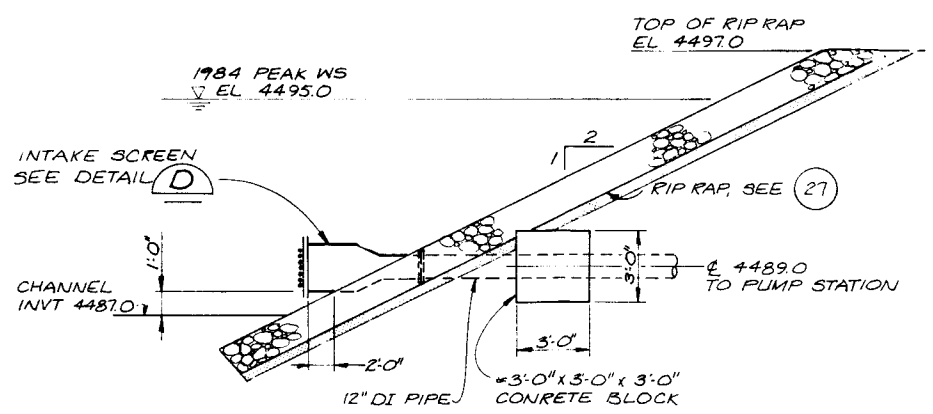

PUMP STATION INTAKE

NTS

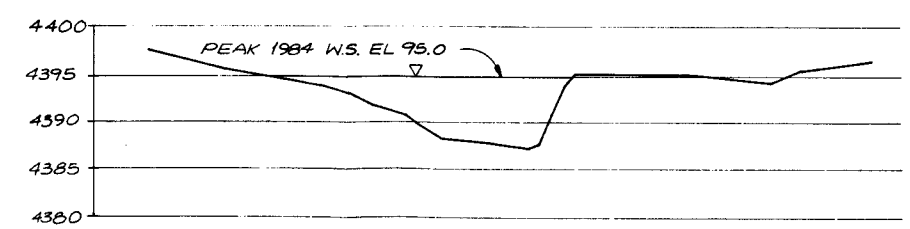

CROSS SECTION #270 C

1" = 10' VERT
1" = 40' HORIZ

REGISTERED PROFESSIONAL ENGINEER No 6778 MICHAEL W COLLINS 12/8/84 STATE OF UTAH

VAUGHN HANSEN ASSOCIATES
CONSULTANTS - ENGINEERS
INCORPORATED SALT LAKE CITY UTAH

CH2M HILL

DSGN	B. LUCE
DR	R.E. BROWN
CHK	L.R. TAYLOR
APVD	M.W. COLLINS

NO.	DATE	REVISION	BY	APVD

REUSE OF DOCUMENTS
THIS DOCUMENT, AND THE IDEAS AND DESIGNS INCORPORATED HEREIN, AS AN INSTRUMENT OF PROFESSIONAL SERVICE, IS THE PROPERTY OF CH2M HILL AND IS NOT TO BE USED, IN WHOLE OR IN PART, FOR ANY OTHER PROJECT WITHOUT THE WRITTEN AUTHORIZATION OF CH2M HILL.
©CH2M HILL, INC.

VERIFY SCALES
BAR IS ONE INCH ON ORIGINAL DRAWING.
0 1"
IF NOT ONE INCH ON THIS SHEET, ADJUST SCALES ACCORDINGLY.

Utah Lake Jordan River Flood Management Program

DIVERSION STRUCTURES-SCHEDULE B
MOUSLEY PUMP STATION
SITE PLAN, PUMP STATION AND DETAILS

SHEET B-1
DATE DEC. 1984
PROJ NO B18331.F1

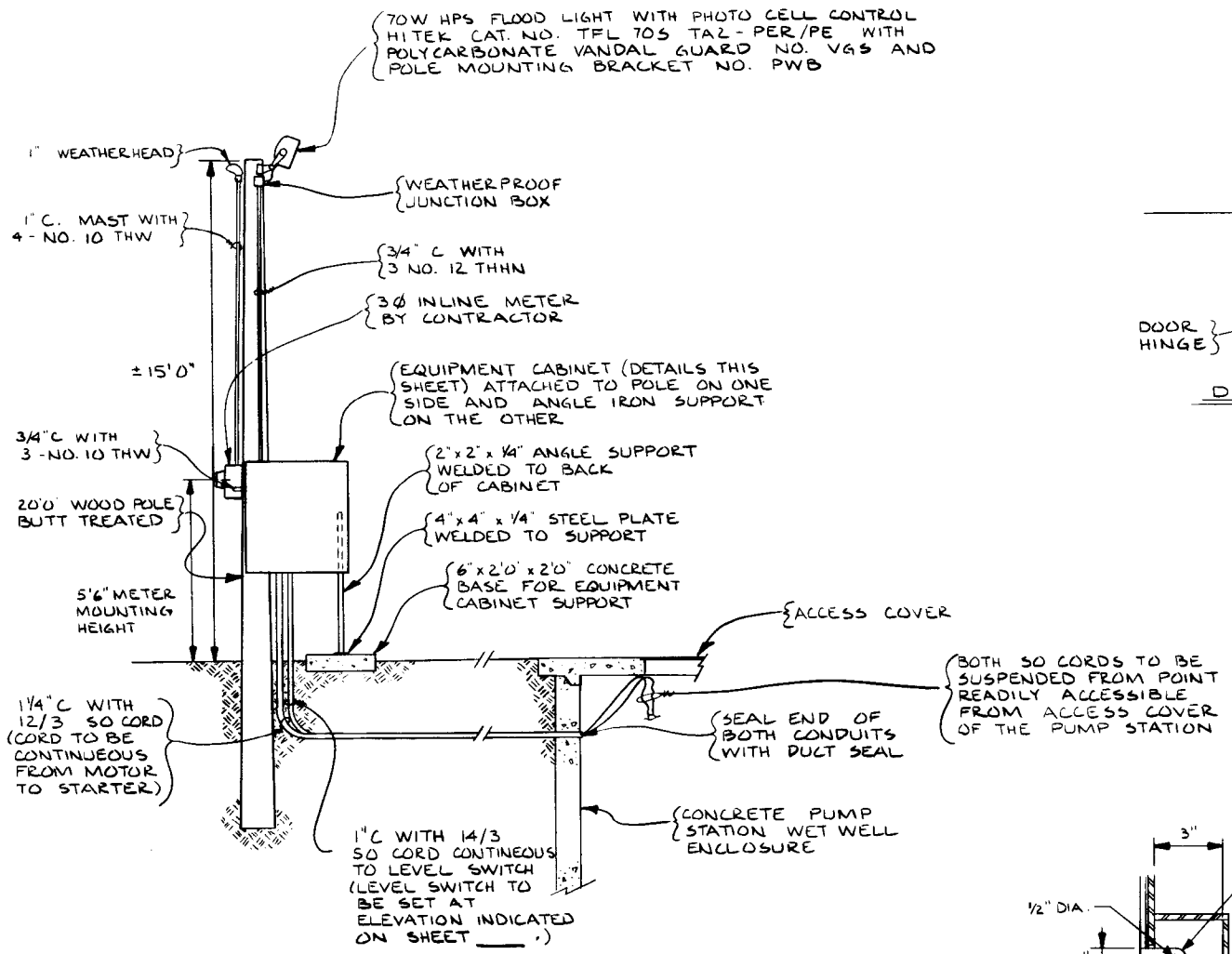

EQUIPMENT CABINET MOUNTING DETAIL

SCALE: 3/8" - 1'0"

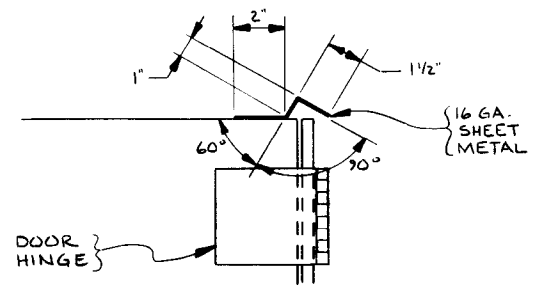

DRIP LIP DETAIL

SCALE: 1/2" - 1"

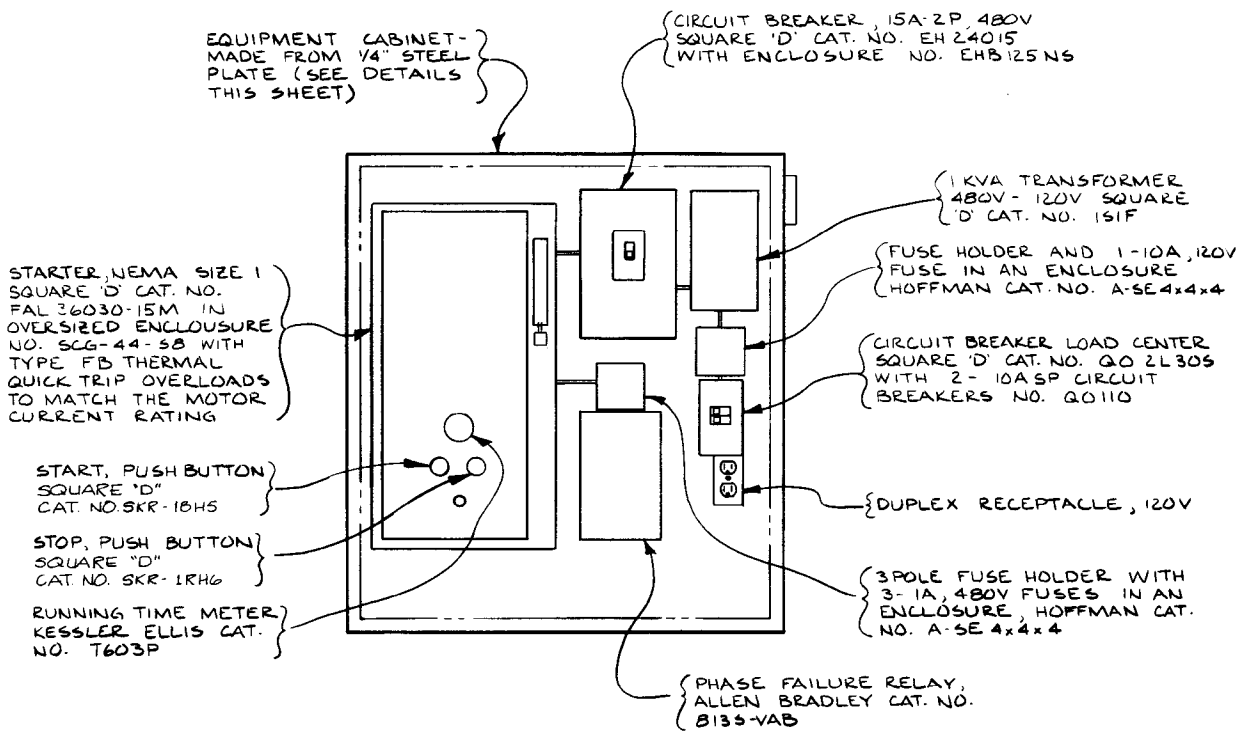

EQUIPMENT MOUNTING DETAIL

SCALE: 11/2" - 1'0"

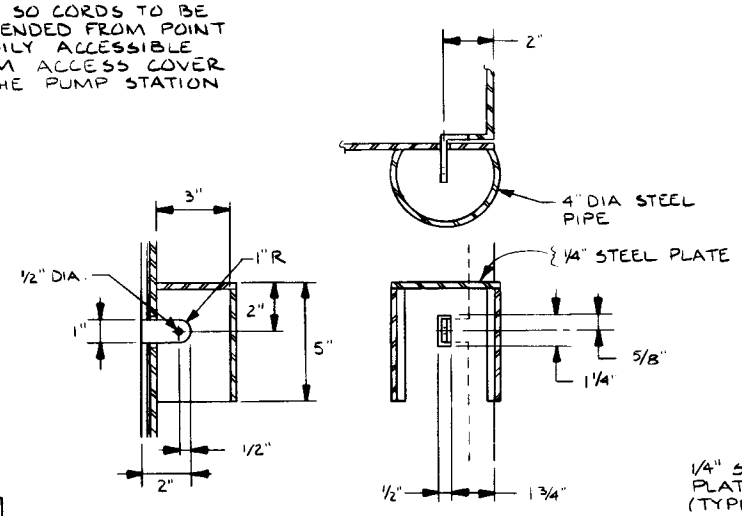

LOCK PROTECTION DETAIL

SCALE: 1/4" - 1"

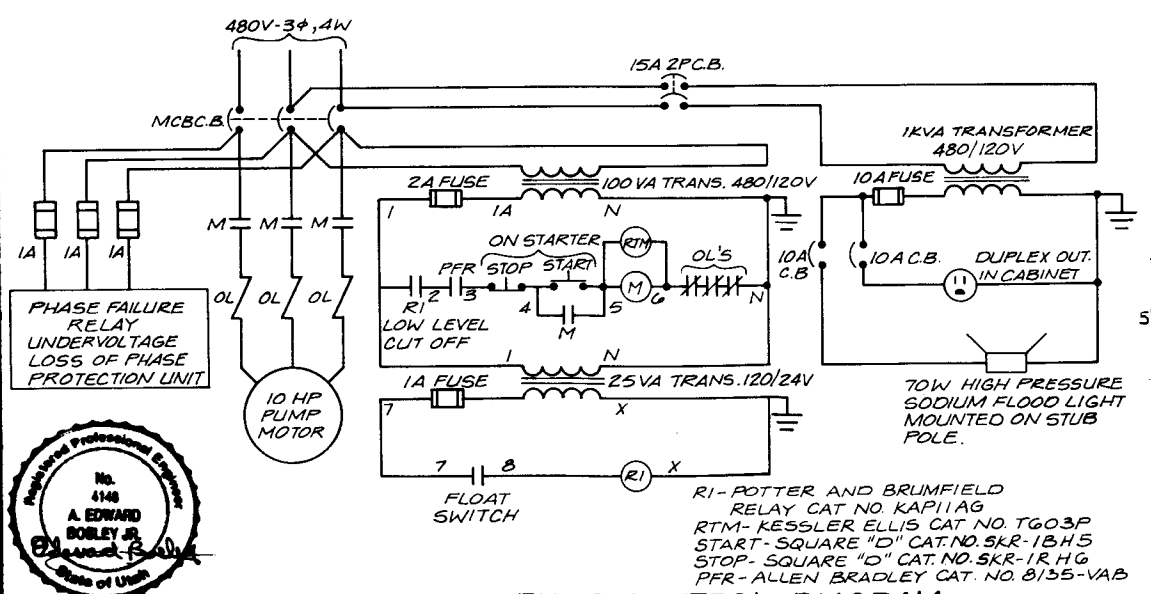

PUMP CONTROL DIAGRAM

NTS

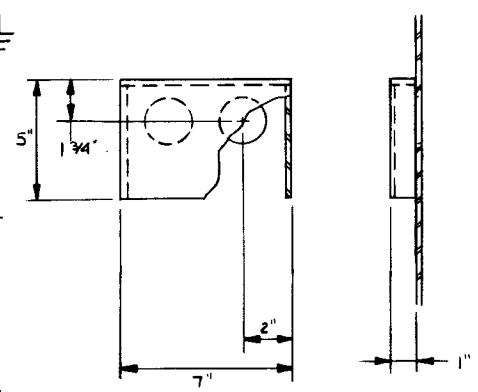

VENT COVER DETAIL

SCALE: 1/4" - 1"

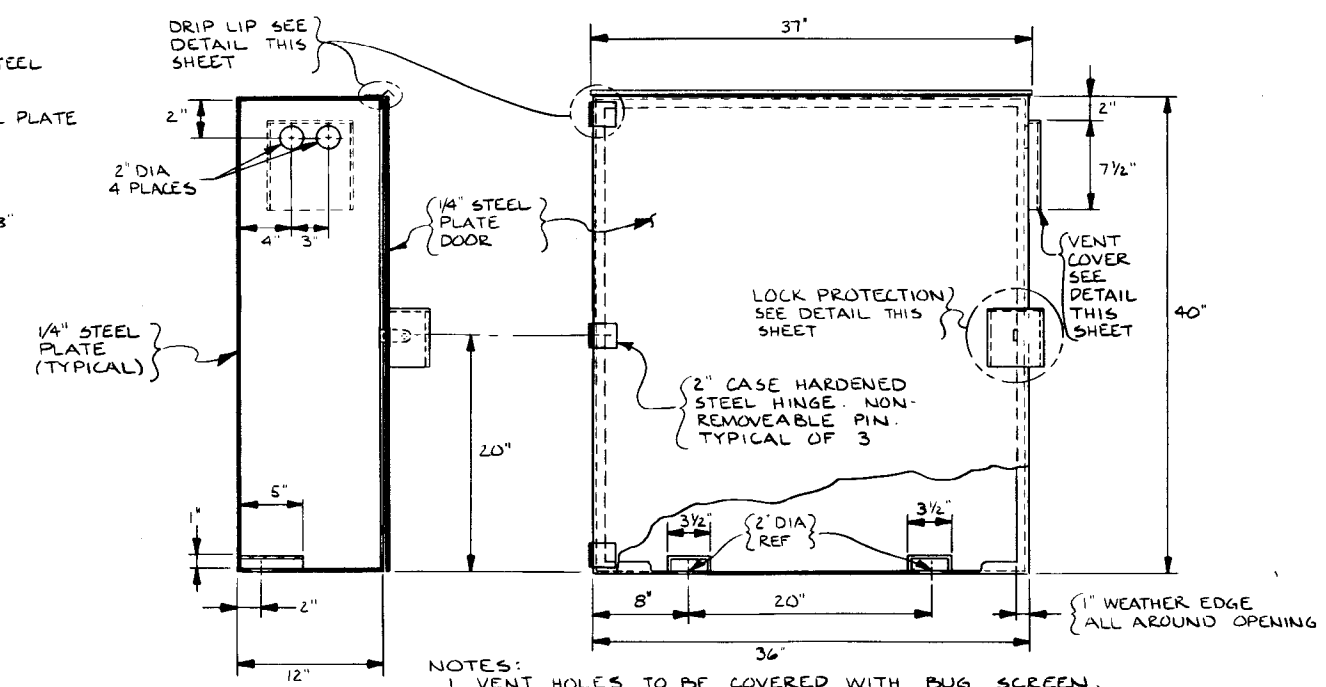

NOTES:
1. VENT HOLES TO BE COVERED WITH BUG SCREEN, 8 OPENINGS PER INCH, SECURED TO INSIDE OF BOX WITH EPOXY GLUE.
2. CABINET TO BE OF WELDED CONSTRUCTION, 1/4" STEEL PLATE
3. ALL METAL SURFACES SHALL RECIEVE ONE COAT OF METAL PRIMER AND TWO COATS ACRYLIC PAINT - COLOR DARK MACHINE GREY

EQUIPMENT CABINET CONSTRUCTION DETAILS

SCALE: 1 1/2" - 1'0"

Registered Professional Engineer No. 4148 A. EDWARD BOSLEY JR. State of Utah

CONSULTANTS / ENGINEERS VAUGHN HANSEN ASSOCIATES INCORPORATED SALT LAKE CITY UTAH

CH2M HILL

DSGN	
DR	D. BRUCE
CHK	E. BOSLEY
APVD	MW. COLLINS

NO.	DATE	REVISION	BY	APVD

REUSE OF DOCUMENTS

THIS DOCUMENT, AND THE IDEAS AND DESIGNS INCORPORATED HEREIN, AS AN INSTRUMENT OF PROFESSIONAL SERVICE, IS THE PROPERTY OF CH2M HILL AND IS NOT TO BE USED, IN WHOLE OR IN PART, FOR ANY OTHER PROJECT WITHOUT THE WRITTEN AUTHORIZATION OF CH2M HILL.
©CH2M HILL, INC.

VERIFY SCALES
BAR IS ONE INCH ON ORIGINAL DRAWING.
0 ——— 1"
IF NOT ONE INCH ON THIS SHEET, ADJUST SCALES ACCORDINGLY.

Utah Lake Jordan River Flood Management Program

DIVERSION STRUCTURES-SCHEDULE B
MOUSLEY PUMP STATION

ELECTRICAL

SHEET B-2
DATE DEC. 1984
PROJ NO. B18331.F1

CURVE DATA

C-1	Δ = 29° 49'	R = 180'
C-2	Δ = 36° 56'	R = 128.8'
C-3	Δ = 83° 21'	R = 50'
C-4	Δ = 16° 35'	R = 287'

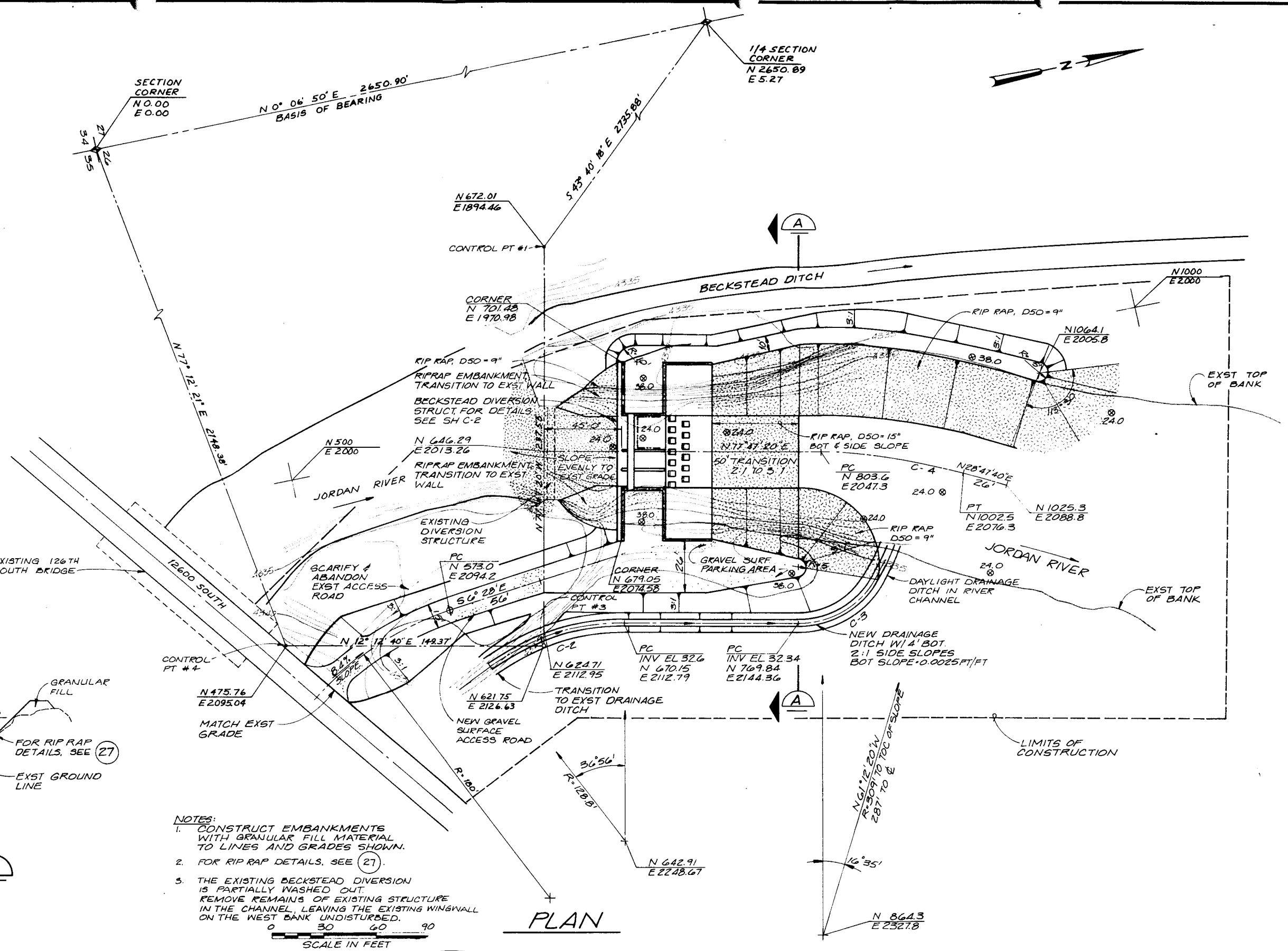

NOTES:
1. CONSTRUCT EMBANKMENTS WITH GRANULAR FILL MATERIAL TO LINES AND GRADES SHOWN.
2. FOR RIP RAP DETAILS, SEE (27).
3. THE EXISTING BECKSTEAD DIVERSION IS PARTIALLY WASHED OUT. REMOVE REMAINS OF EXISTING STRUCTURE IN THE CHANNEL, LEAVING THE EXISTING WINGWALL ON THE WEST BANK UNDISTURBED.

REGISTERED PROFESSIONAL ENGINEER No. 6778 MICHAEL W. COLLINS 12/18/84 STATE OF UTAH

CONSULTANTS / ENGINEERS
VAUGHN HANSEN ASSOCIATES
INCORPORATED
SALT LAKE CITY, UTAH

CH2M HILL

DSGN	G. POOLE
DR	B. URTON
CHK	L.R. TAYLOR
APVD	MW COLLINS

NO.	DATE	REVISION	BY	APVD

REUSE OF DOCUMENTS
THIS DOCUMENT, AND THE IDEAS AND DESIGNS INCORPORATED HEREIN, AS AN INSTRUMENT OF PROFESSIONAL SERVICE, IS THE PROPERTY OF CH2M HILL AND IS NOT TO BE USED, IN WHOLE OR IN PART, FOR ANY OTHER PROJECT WITHOUT THE WRITTEN AUTHORIZATION OF CH2M HILL.
©CH2M HILL, INC.

VERIFY SCALES
BAR IS ONE INCH ON ORIGINAL DRAWING.
0 1"
IF NOT ONE INCH ON THIS SHEET, ADJUST SCALES ACCORDINGLY.

Utah Lake Jordan River Flood Management Program

DIVERSION STRUCTURES - SCHEDULE C
BECKSTEAD DIVERSION STRUCTURE
SITE PLAN

SHEET C-1
DATE DEC. 1984
PROJ NO. B18331.F1

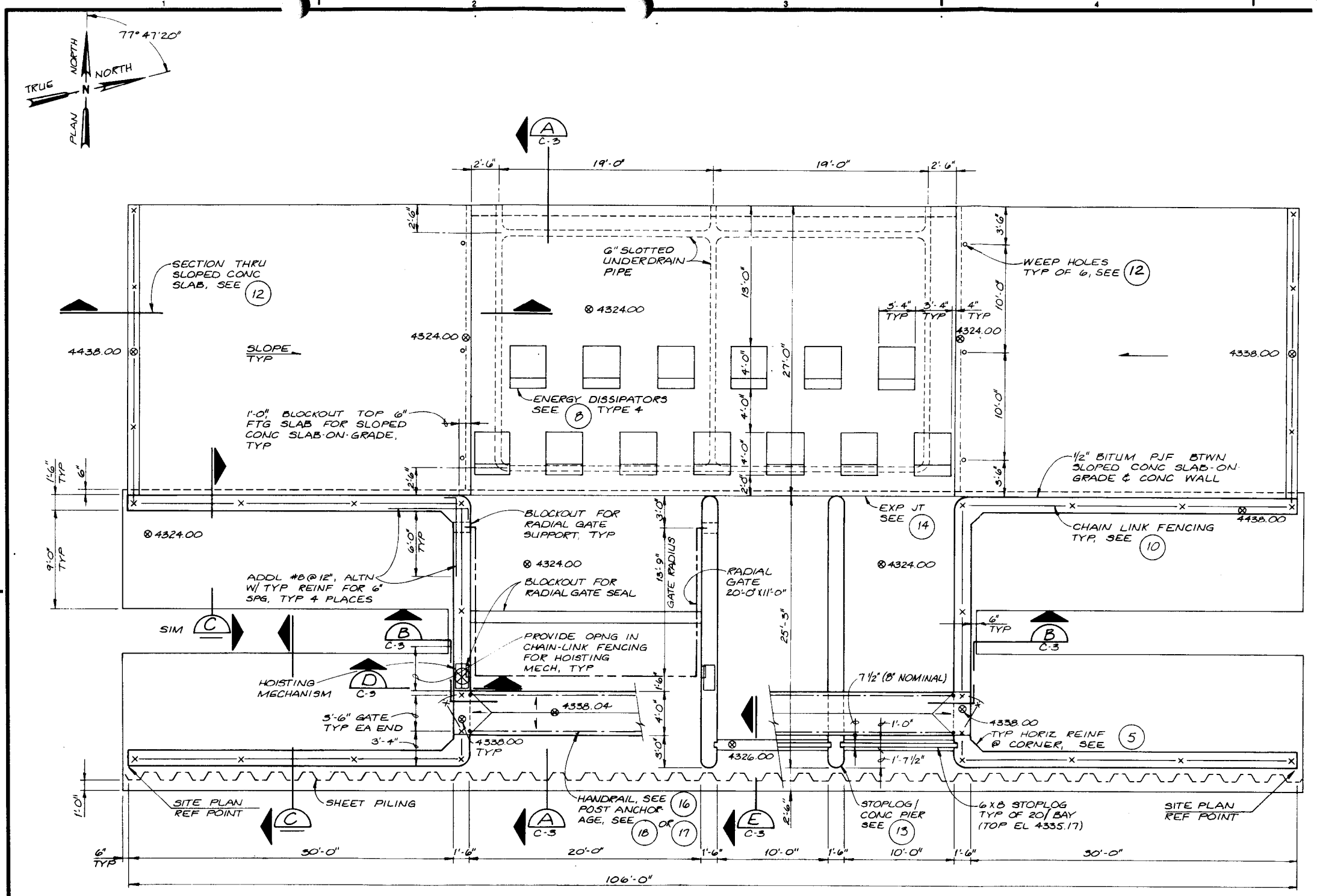

PLAN

3/16" = 1'-0"

GENERAL NOTES:

1. LOADS. STRUCTURE WEIGHT PLUS
   LIVE LOAD:
   ELEVATED SLAB: 100 PSF
   SOIL (EQUIVALENT HYDROSTATIC PRESSURE)
   60 PCF, ABOVE GROUND WATER
   90 PCF, BELOW GROUND WATER
2. SEE SPECIFICATION 02200, EARTHWORK FOR SUBGRADE PREPARATION AND BACKFILL.
3. SEE GENERAL STRUCTURAL NOTES SHEET 2.
4. TO LIMIT DIFFERENTIAL SOIL PRESSURE, BACKFILL SHALL BE PLACED SUCH THAT SOIL LEVEL DIFFERENTIAL DOES NOT EXCEED 4 FEET BETWEEN OPPOSITE ENDS OF STRUCTURE OR AT ONE END OF STRUCTURE.
5. CONTRACTOR TO COORDINATE ALL BLOCKOUTS. DIMENSIONS AND EMBEDDED PARTS FOR RADIAL GATE W/ RADIAL GATE MANUFACTURER.

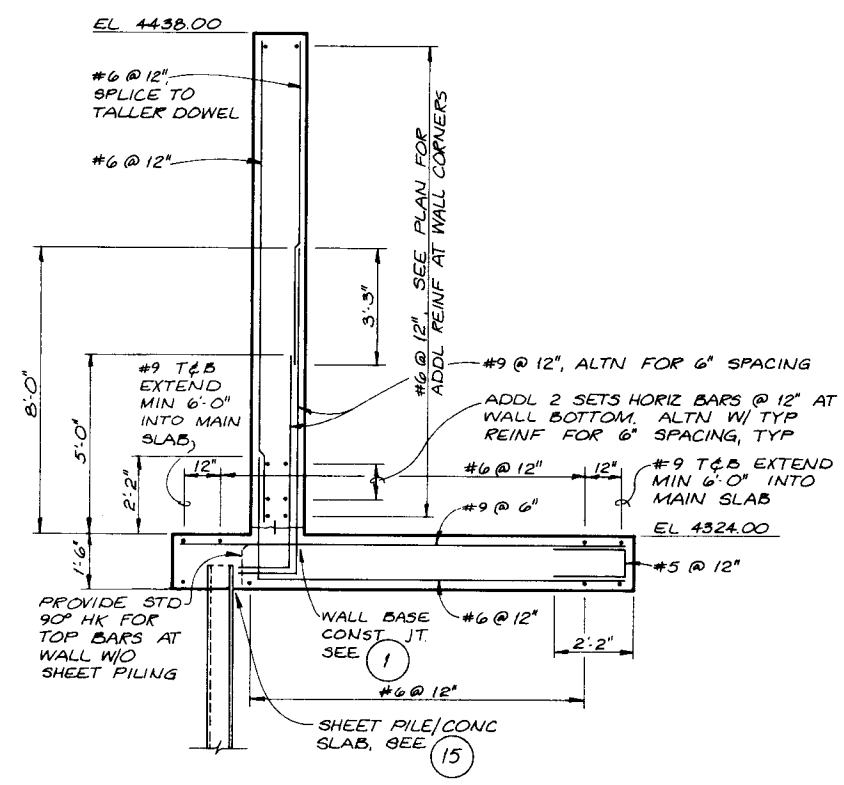

SECTION C

3/8" = 1'-0"

C-3

REGISTERED PROFESSIONAL ENGINEER No. 6888 SHERRIE W. PITKIN STATE OF UTAH

CH2M HILL	DSGN R.W. TOEBBEN					
	DR R.E. BROWN					
	CHK S.M. PITKIN					
	APVD M.W. COLLINS	NO.	DATE	REVISION	BY	APVD

REUSE OF DOCUMENTS
THIS DOCUMENT, AND THE IDEAS AND DESIGNS INCORPORATED HEREIN, AS AN INSTRUMENT OF PROFESSIONAL SERVICE, IS THE PROPERTY OF CH2M HILL AND IS NOT TO BE USED, IN WHOLE OR IN PART, FOR ANY OTHER PROJECT WITHOUT THE WRITTEN AUTHORIZATION OF CH2M HILL.
©CH2M HILL, INC.

VERIFY SCALES
BAR IS ONE INCH ON ORIGINAL DRAWING.
0 1"
IF NOT ONE INCH ON THIS SHEET, ADJUST SCALES ACCORDINGLY.

Utah Lake Jordan River Flood Management Program

DIVERSION STRUCTURES-SCHEDULE C
BECKSTEAD DIVERSION STRUCTURE
STRUCTURAL PLAN

SHEET C-2
DATE DEC. 1984
PROJ NO. B18331.F1

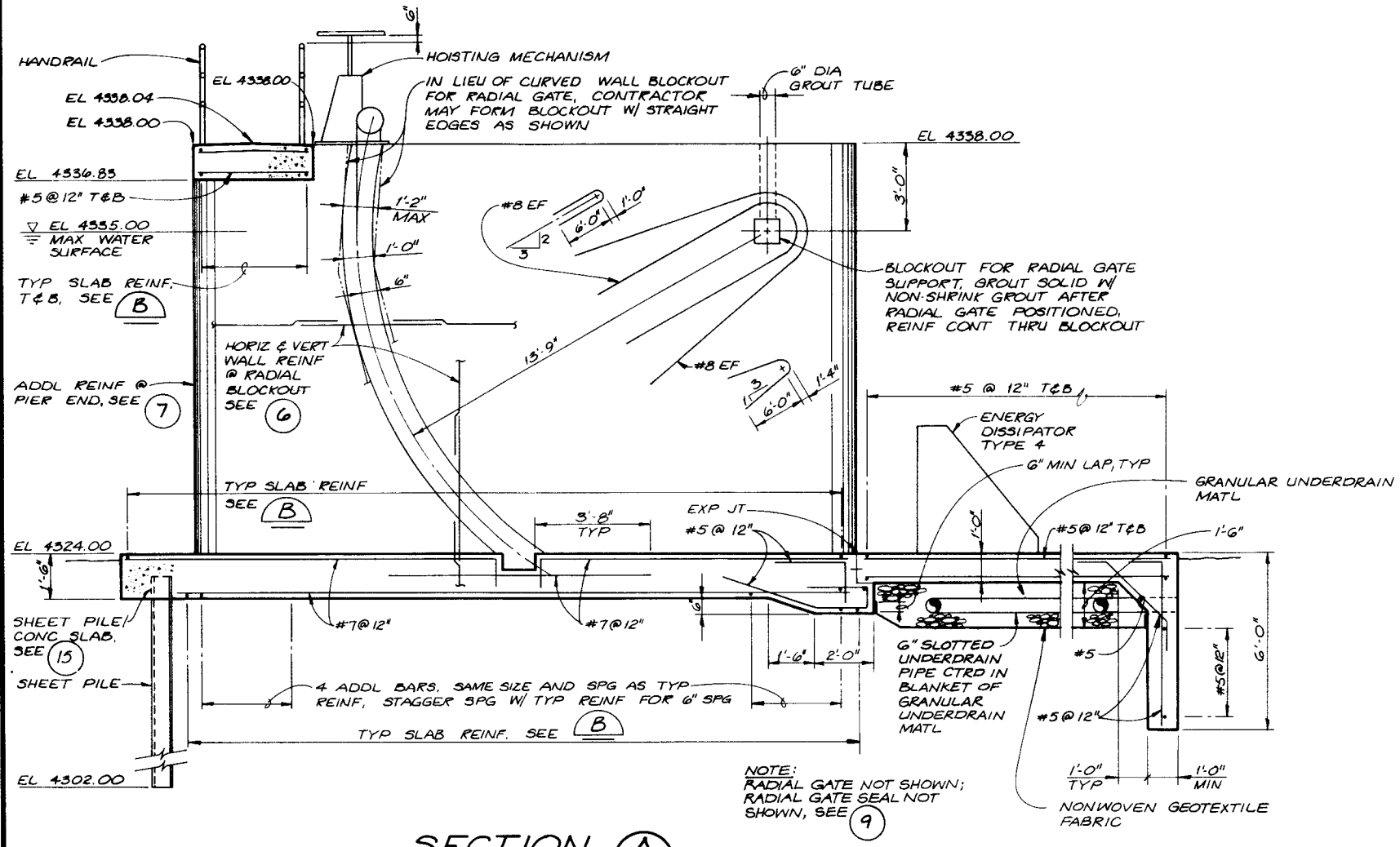

NOTE:
RADIAL GATE NOT SHOWN; RADIAL GATE SEAL NOT SHOWN, SEE 9

SECTION A
3/8" = 1'-0"
C-2

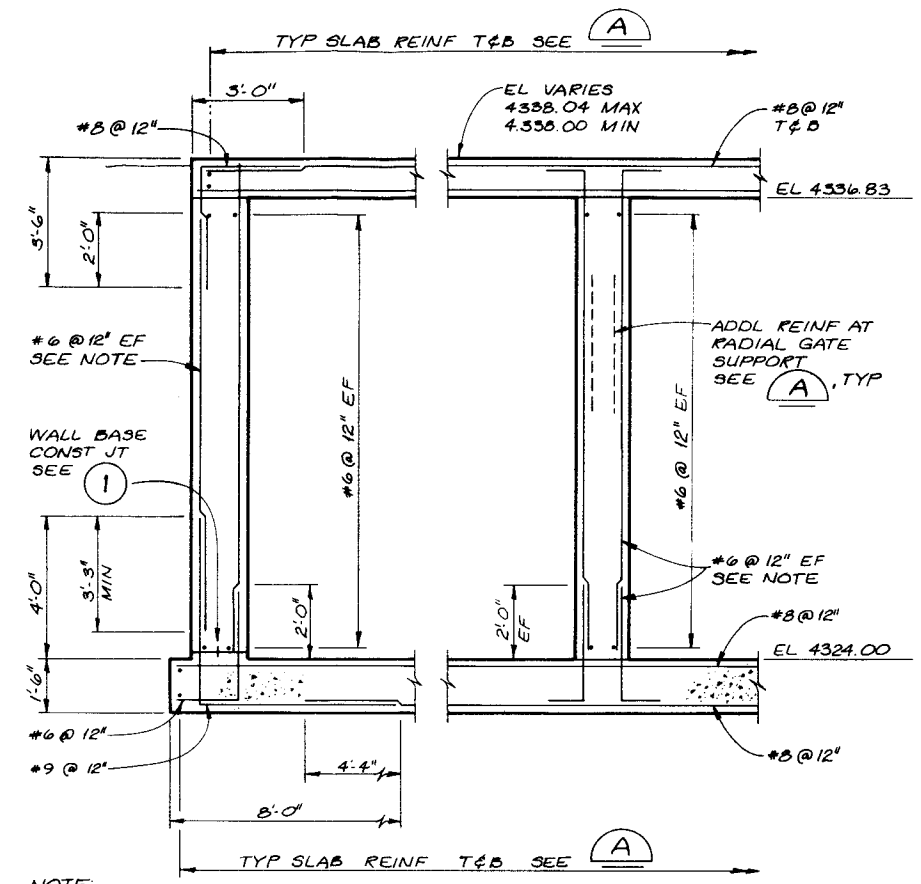

NOTE:
AT WALL SECTIONS W/O ELEVATED SLABS EXTEND TYP WALL VERTICAL REINFORCING TO WALL TOP.

SECTION B
3/8" = 1'-0"
C-2

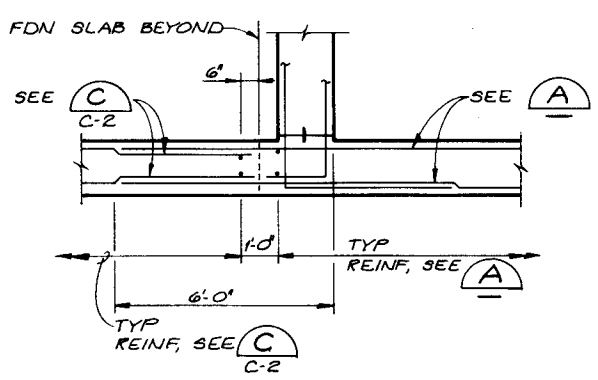

SECTION D
3/8" = 1'-0"
C-2

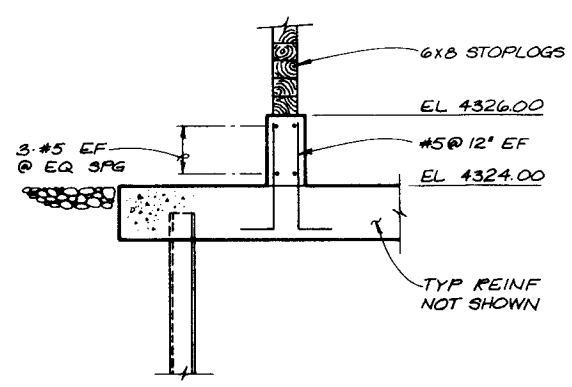

SECTION E
3/8" = 1'-0"
C-2

REGISTERED PROFESSIONAL ENGINEER — SHERRIL M. PITKIN — STATE OF UTAH

CH2M HILL

DSGN	R.W. TOEBBEN
DR	R.E. BROWN
CHK	S.M. PITKIN
APVD	M.W. COLLINS

NO.	DATE	REVISION	BY	APVD

REUSE OF DOCUMENTS
THIS DOCUMENT, AND THE IDEAS AND DESIGNS INCORPORATED HEREIN, AS AN INSTRUMENT OF PROFESSIONAL SERVICE, IS THE PROPERTY OF CH2M HILL AND IS NOT TO BE USED, IN WHOLE OR IN PART, FOR ANY OTHER PROJECT WITHOUT THE WRITTEN AUTHORIZATION OF CH2M HILL.
©CH2M HILL, INC.

VERIFY SCALES
BAR IS ONE INCH ON ORIGINAL DRAWING.
0 1"
IF NOT ONE INCH ON THIS SHEET, ADJUST SCALES ACCORDINGLY.

Utah Lake Jordan River Flood Management Program

DIVERSION STRUCTURES-SCHEDULE C
BECKSTEAD DIVERSION STRUCTURE
STRUCTURAL SECTIONS

SHEET C-3
DATE DEC. 1984
PROJ NO. B18331.F1

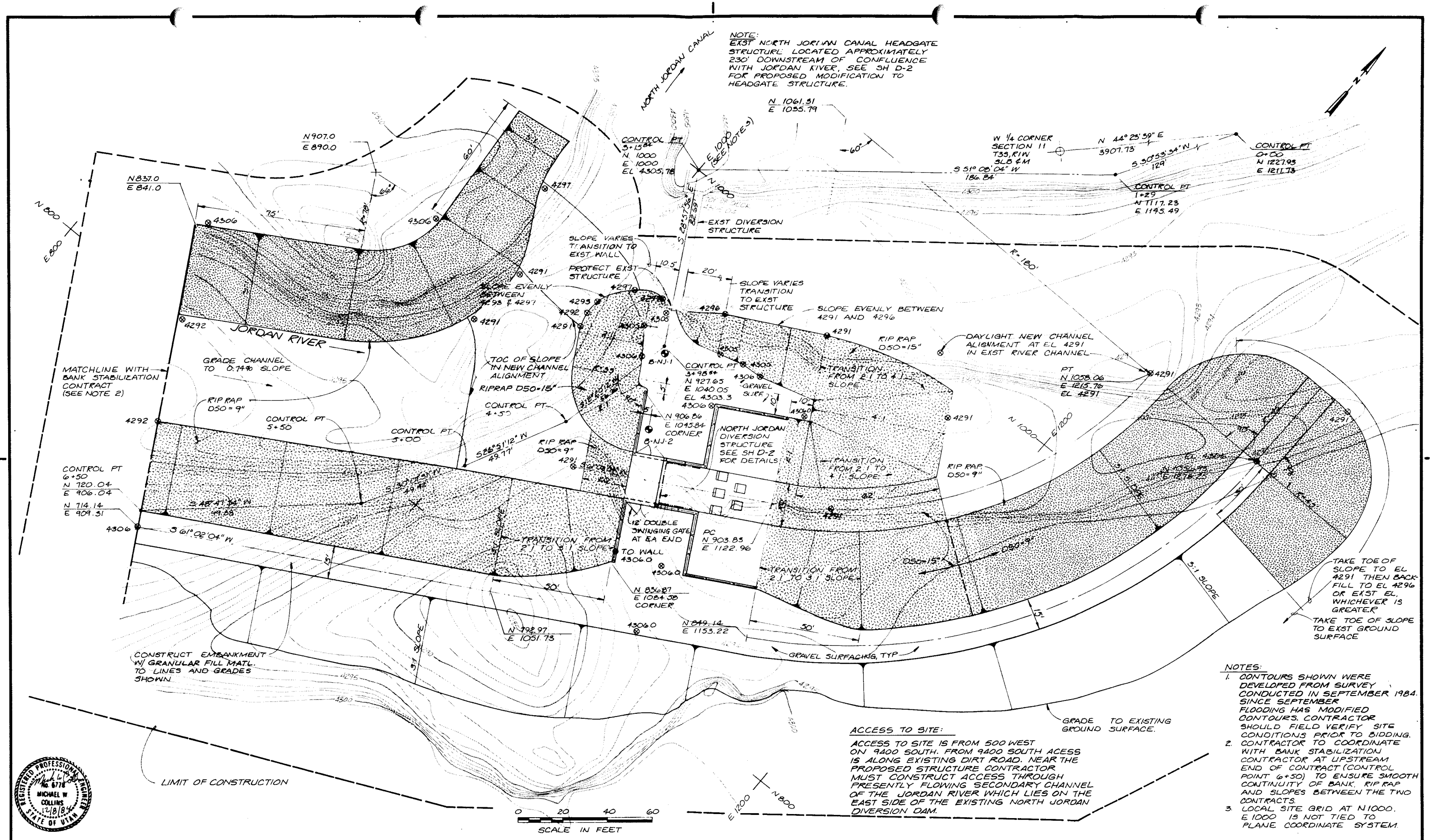

NOTES:

1. CONTOURS SHOWN WERE DEVELOPED FROM SURVEY CONDUCTED IN SEPTEMBER 1984. SINCE SEPTEMBER FLOODING HAS MODIFIED CONTOURS. CONTRACTOR SHOULD FIELD VERIFY SITE CONDITIONS PRIOR TO BIDDING.
2. CONTRACTOR TO COORDINATE WITH BANK STABILIZATION CONTRACTOR AT UPSTREAM END OF CONTRACT (CONTROL POINT 6+50) TO ENSURE SMOOTH CONTINUITY OF BANK, RIP RAP AND SLOPES BETWEEN THE TWO CONTRACTS.
3. LOCAL SITE GRID AT N1000, E1000 IS NOT TIED TO PLANE COORDINATE SYSTEM.

ACCESS TO SITE:

ACCESS TO SITE IS FROM 500 WEST ON 9400 SOUTH. FROM 9400 SOUTH ACESS IS ALONG EXISTING DIRT ROAD. NEAR THE PROPOSED STRUCTURE CONTRACTOR MUST CONSTRUCT ACCESS THROUGH PRESENTLY FLOWING SECONDARY CHANNEL OF THE JORDAN RIVER WHICH LIES ON THE EAST SIDE OF THE EXISTING NORTH JORDAN DIVERSION DAM.

REGISTERED PROFESSIONAL ENGINEER No. 6778 MICHAEL W. COLLINS 12/8/84 STATE OF UTAH

VAUGHN HANSEN ASSOCIATES INCORPORATED SALT LAKE CITY, UTAH

CH2M HILL

DSGN	M. ALLEN
DR	R.E. BROWN
CHK	L.R. TAYLOR
APVD	MW. COLLINS

NO.	DATE	REVISION	BY	APVD

REUSE OF DOCUMENTS

THIS DOCUMENT, AND THE IDEAS AND DESIGNS INCORPORATED HEREIN, AS AN INSTRUMENT OF PROFESSIONAL SERVICE, IS THE PROPERTY OF CH2M HILL AND IS NOT TO BE USED, IN WHOLE OR IN PART, FOR ANY OTHER PROJECT WITHOUT THE WRITTEN AUTHORIZATION OF CH2M HILL.

©CH2M HILL, INC.

VERIFY SCALES
BAR IS ONE INCH ON ORIGINAL DRAWING.
0 1"
IF NOT ONE INCH ON THIS SHEET, ADJUST SCALES ACCORDINGLY.

Utah Lake Jordan River Flood Management Program

DIVERSION STRUCTURES–SCHEDULE D
NORTH JORDAN DIVERSION STRUCTURE

SITE PLAN

SHEET D-1
DATE DEC. 1984
PROJ NO. B18331.F1

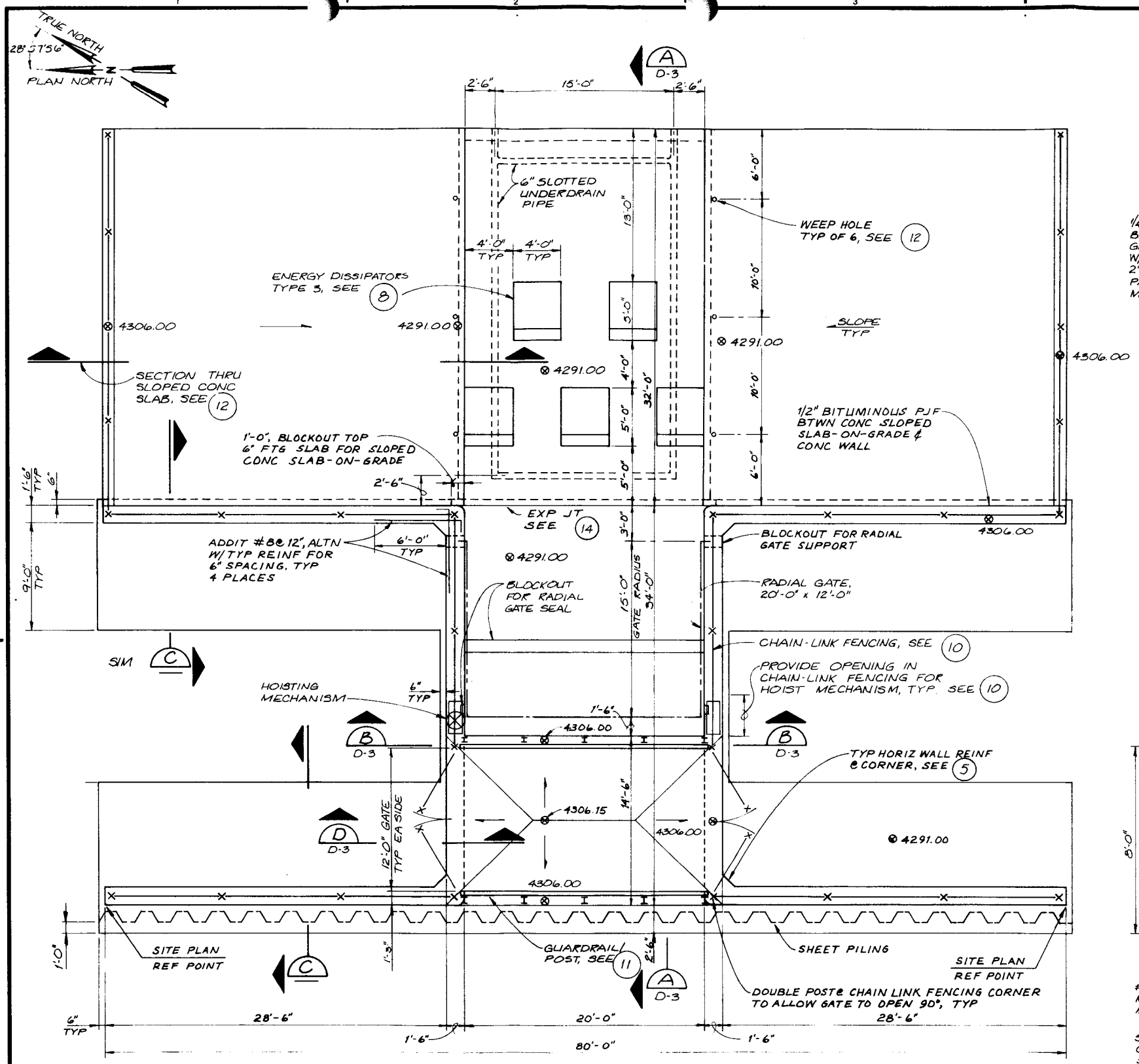

PLAN

3/16" = 1'-0"

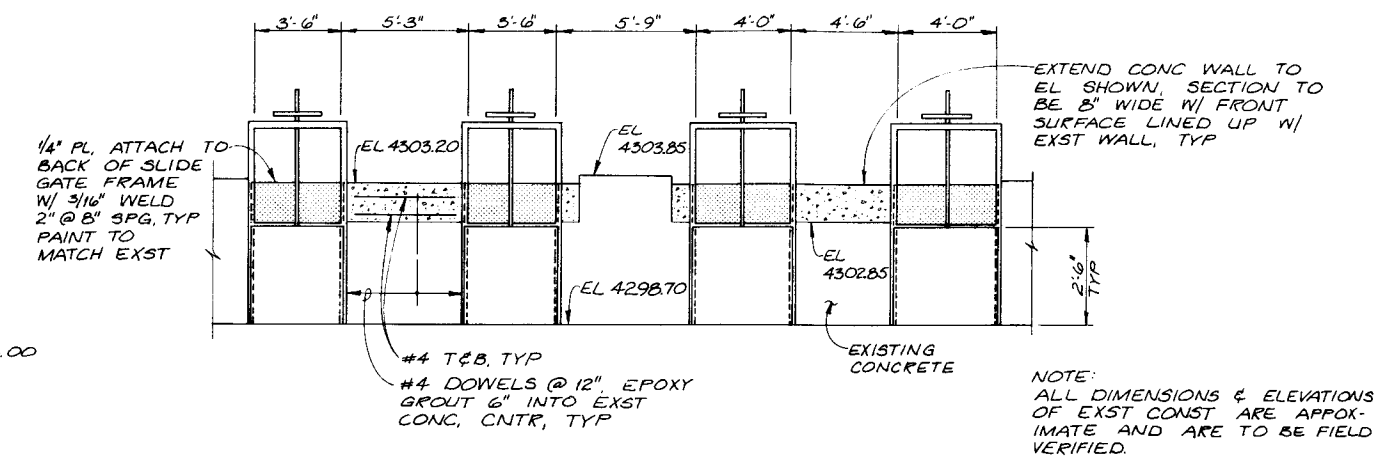

NOTE:
ALL DIMENSIONS & ELEVATIONS OF EXST CONST ARE APPOXIMATE AND ARE TO BE FIELD VERIFIED.

FRONT ELEVATION

EXST NORTH JORDAN CANAL HEADGATE

1/4" = 1'-0"

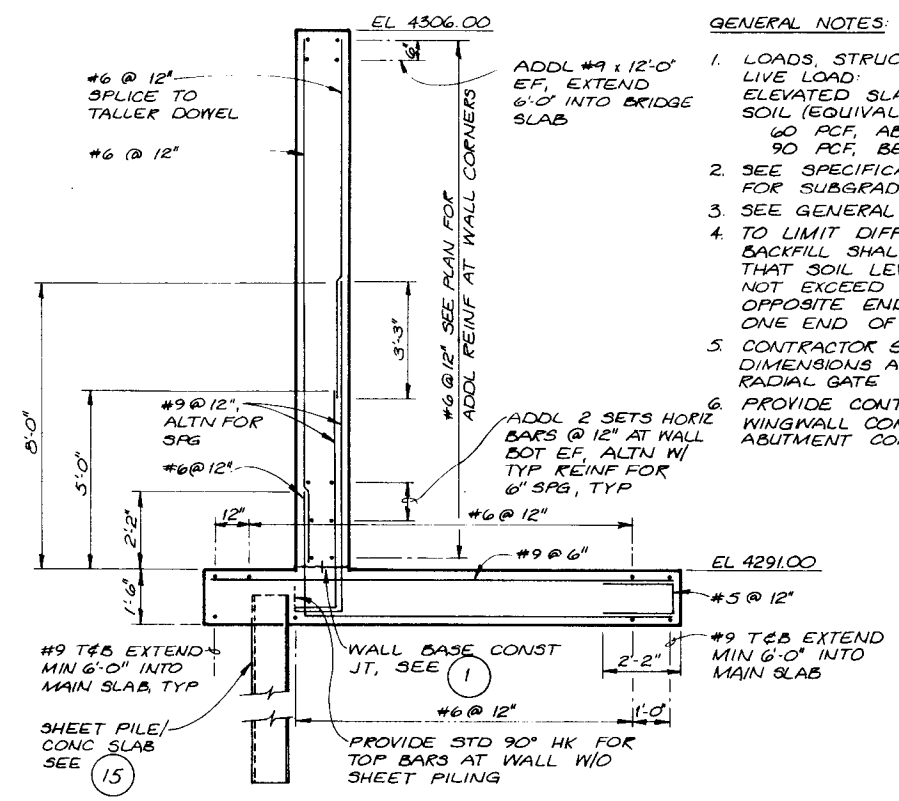

SECTION C / D-3

3/8" = 1'-0"

GENERAL NOTES:

1. LOADS: STRUCTURE WEIGHT PLUS LIVE LOAD:
   ELEVATED SLAB: HS 20 TRUCK LOADING
   SOIL (EQUIVALENT HYDROSTATIC PRESSURE)
   60 PCF, ABOVE GROUND WATER
   90 PCF, BELOW GROUND WATER
2. SEE SPECIFICATION 02200, EARTHWORK FOR SUBGRADE PREPARATION AND BACKFILL.
3. SEE GENERAL NOTES SHEET 2.
4. TO LIMIT DIFFERENTIAL SOIL PRESSURE, BACKFILL SHALL BE PLACED SUCH THAT SOIL LEVEL DIFFERENTIAL DOES NOT EXCEED 4 FEET BETWEEN OPPOSITE ENDS OF STRUCTURE OR AT ONE END OF STRUCTURE.
5. CONTRACTOR SHALL COORDINATE ALL BLOCKOUTS, DIMENSIONS AND EMBEDDED PARTS FOR RADIAL GATE W/ RADIAL GATE MANUFACTURER.
6. PROVIDE CONTINUOUS WATERSTOP AT SLAB/ WINGWALL CONSTRUCTION JOINT AND SLAB/ ABUTMENT CONSTRUCTION JOINT.

REGISTERED PROFESSIONAL ENGINEER No. 5090 STATE OF UTAH

CH2M HILL

DSGN R. W. TOEBBEN					
DR R.E. BROWN					
CHK S. M. PITKIN					
APVD M.W. COLLINS	NO.	DATE	REVISION	BY	APVD

REUSE OF DOCUMENTS
THIS DOCUMENT, AND THE IDEAS AND DESIGNS INCORPORATED HEREIN, AS AN INSTRUMENT OF PROFESSIONAL SERVICE, IS THE PROPERTY OF CH2M HILL AND IS NOT TO BE USED, IN WHOLE OR IN PART, FOR ANY OTHER PROJECT WITHOUT THE WRITTEN AUTHORIZATION OF CH2M HILL.
©CH2M HILL, INC.

VERIFY SCALES
BAR IS ONE INCH ON ORIGINAL DRAWING.
0 1"
IF NOT ONE INCH ON THIS SHEET, ADJUST SCALES ACCORDINGLY.

Utah Lake Jordan River Flood Management Program

DIVERSION STRUCTURES-SCHEDULE D
NORTH JORDAN DIVERSION STRUCTURE
STRUCTURAL PLAN

SHEET D-2
DATE DEC. 1984
PROJ NO. B18331.F1

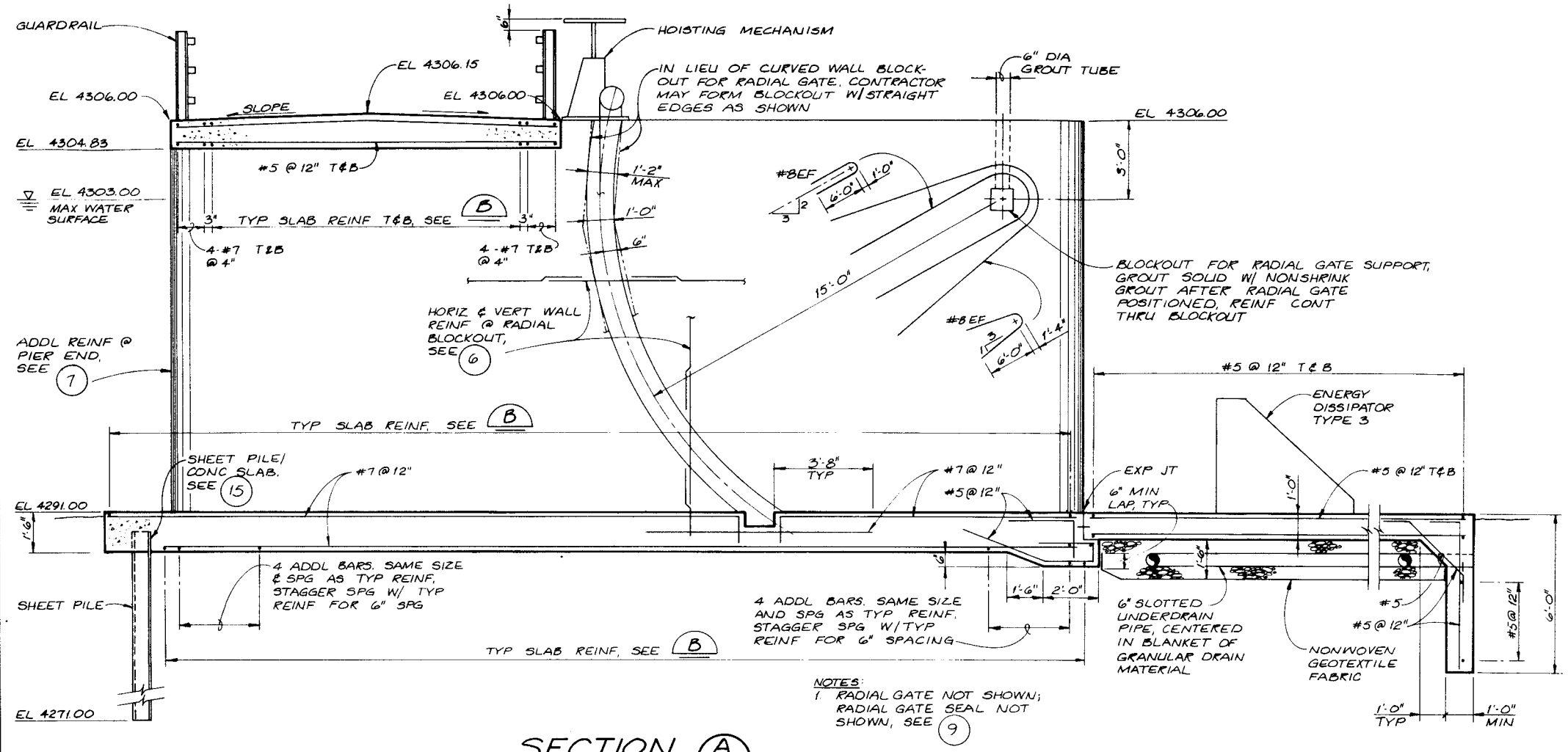

NOTES:
1. RADIAL GATE NOT SHOWN; RADIAL GATE SEAL NOT SHOWN, SEE 9

SECTION A
3/16" = 1'-0"
D-2

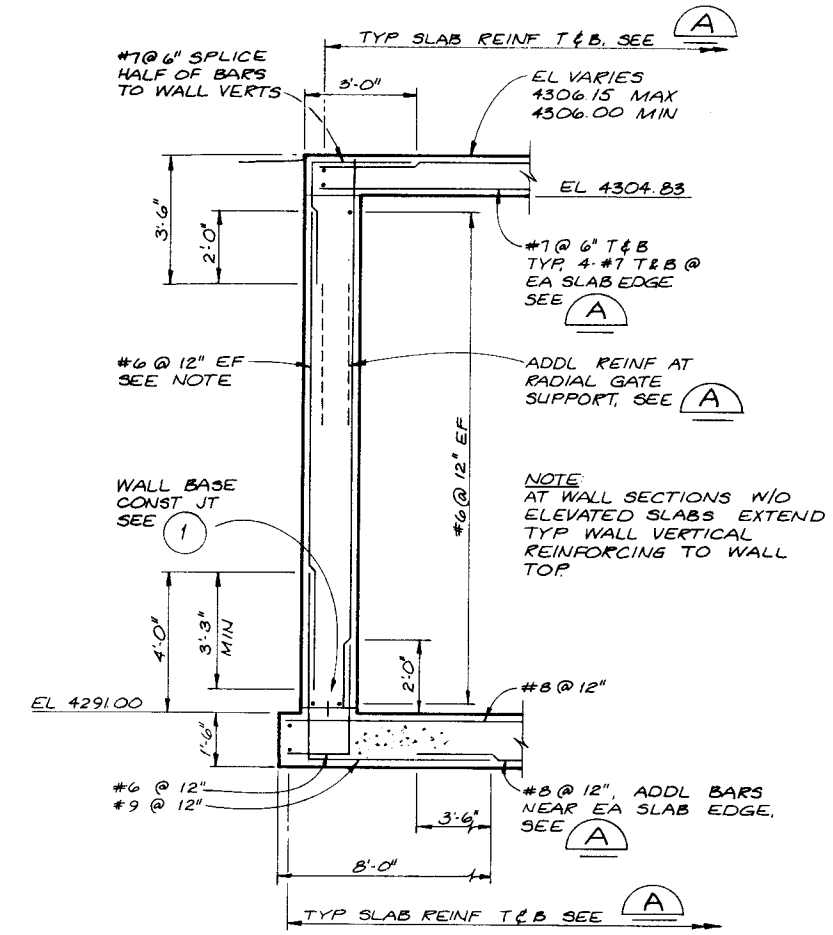

NOTE:
AT WALL SECTIONS W/O ELEVATED SLABS EXTEND TYP WALL VERTICAL REINFORCING TO WALL TOP.

SECTION B
3/16" = 1'-0"
D-2

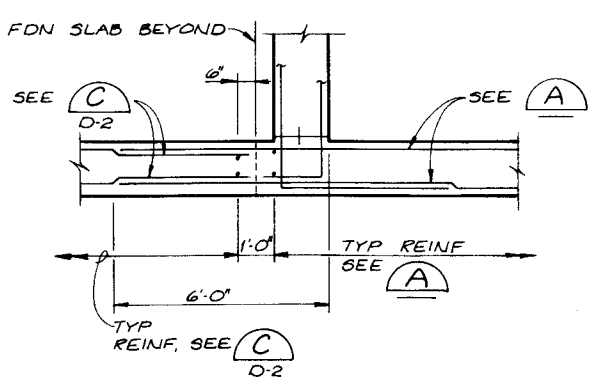

SECTION D
3/16" = 1'-0"
D-2

REGISTERED PROFESSIONAL ENGINEER No. 6800 SHERMAN M. PITKIN STATE OF UTAH

CH2M HILL	DSGN R.W. TOEBBEN					
	DR R.E. BROWN					
	CHK S.M. PITKIN					
	APVD M.W. COLLINS	NO.	DATE	REVISION	BY	APVD

REUSE OF DOCUMENTS
THIS DOCUMENT, AND THE IDEAS AND DESIGNS INCORPORATED HEREIN, AS AN INSTRUMENT OF PROFESSIONAL SERVICE, IS THE PROPERTY OF CH2M HILL AND IS NOT TO BE USED, IN WHOLE OR IN PART, FOR ANY OTHER PROJECT WITHOUT THE WRITTEN AUTHORIZATION OF CH2M HILL.
©CH2M HILL, INC.

VERIFY SCALES
BAR IS ONE INCH ON ORIGINAL DRAWING.
0 1"
IF NOT ONE INCH ON THIS SHEET, ADJUST SCALES ACCORDINGLY.

Utah Lake Jordan River Flood Management Program

DIVERSION STRUCTURES-SCHEDULE D
NORTH JORDAN DIVERSION STRUCTURE

STRUCTURAL SECTIONS

SHEET D-3
DATE DEC. 1984
PROJ NO. B18331.F1

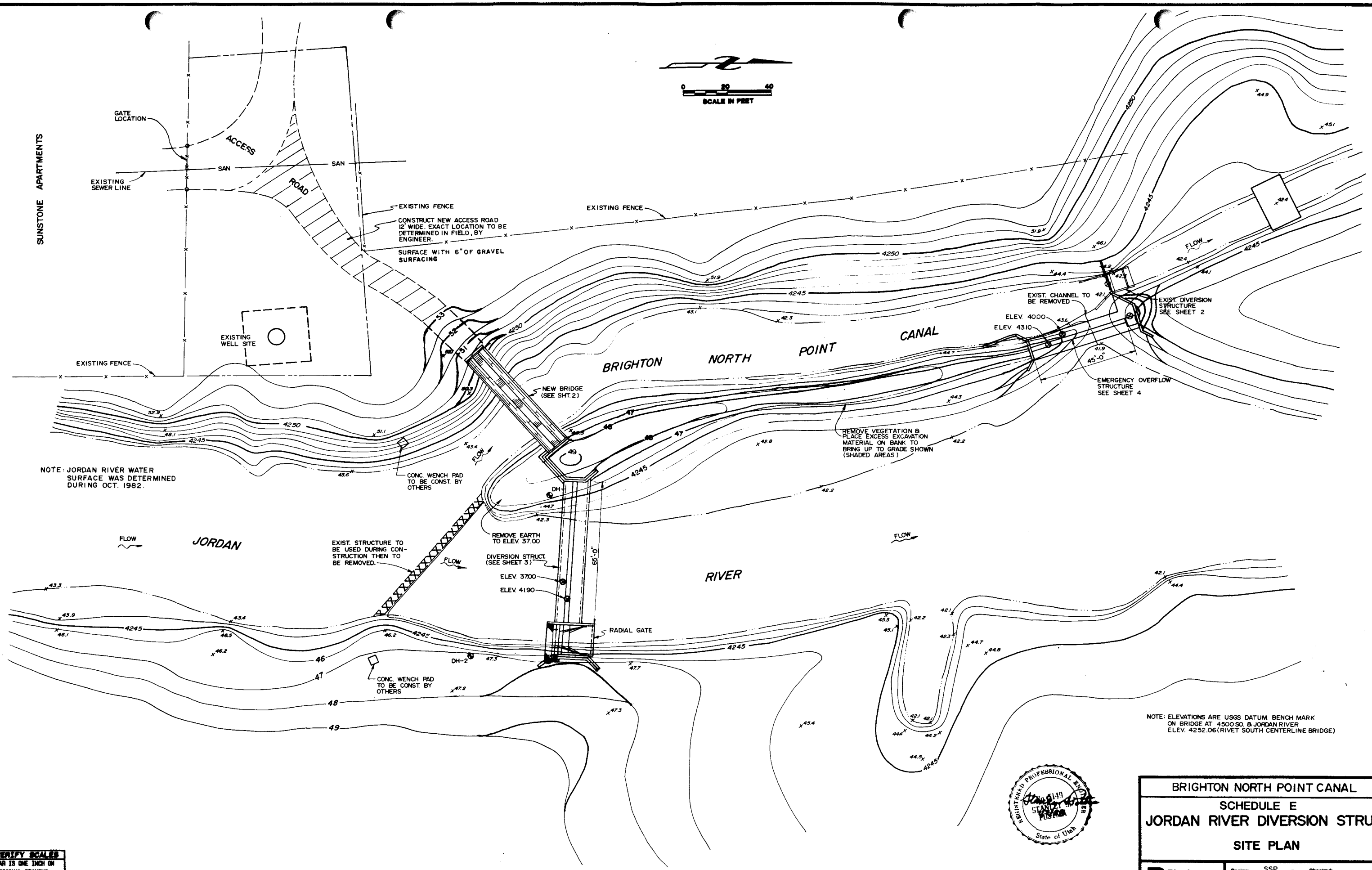

Rev.	By	Date	Remarks
1	AC	11/13/84	REVISED DIVERSION STRUCTURE

VERIFY SCALES
BAR IS ONE INCH ON ORIGINAL DRAWING
0 ——— 1"
IF NOT ONE INCH ON THIS SHEET, ADJUST SCALES ACCORDINGLY

Utah Lake Jordan River Flood Management Program

BRIGHTON NORTH POINT CANAL

SCHEDULE E

JORDAN RIVER DIVERSION STRUCT.

SITE PLAN

Bingham Engineering

Design: SSP
Drawn: JRW
Approved:
Checked:
Checked: SSP

Date DEC. 1982 | 397 | Sht. E1 of 4

BRUNING 44" 42" 4138 1.5

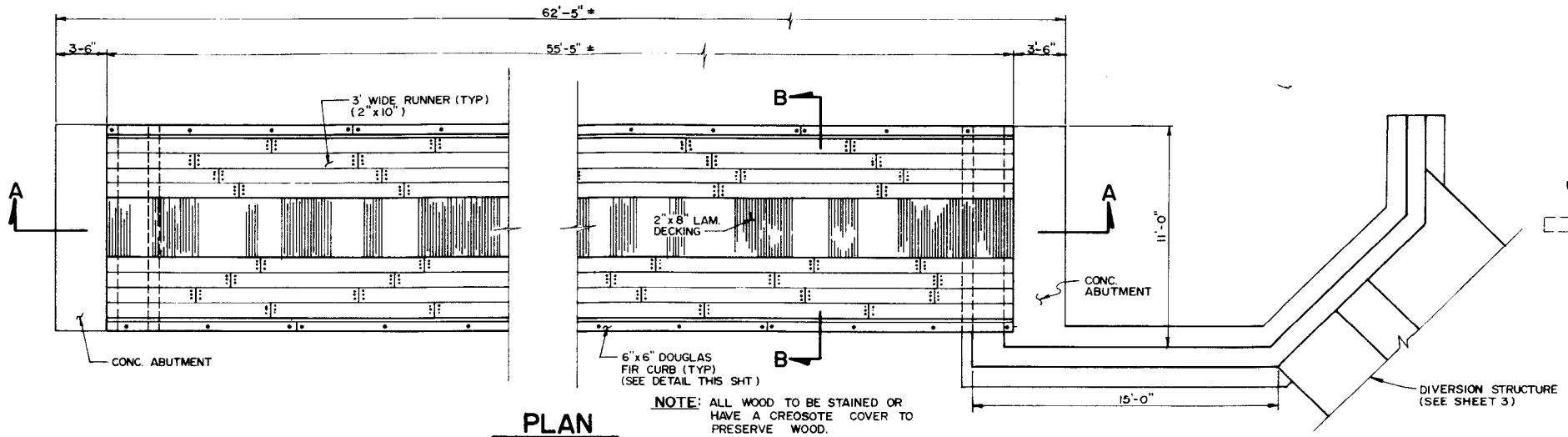

NOTE: ALL WOOD TO BE STAINED OR HAVE A CREOSOTE COVER TO PRESERVE WOOD.

PLAN
SCALE 1" = 4'-0"

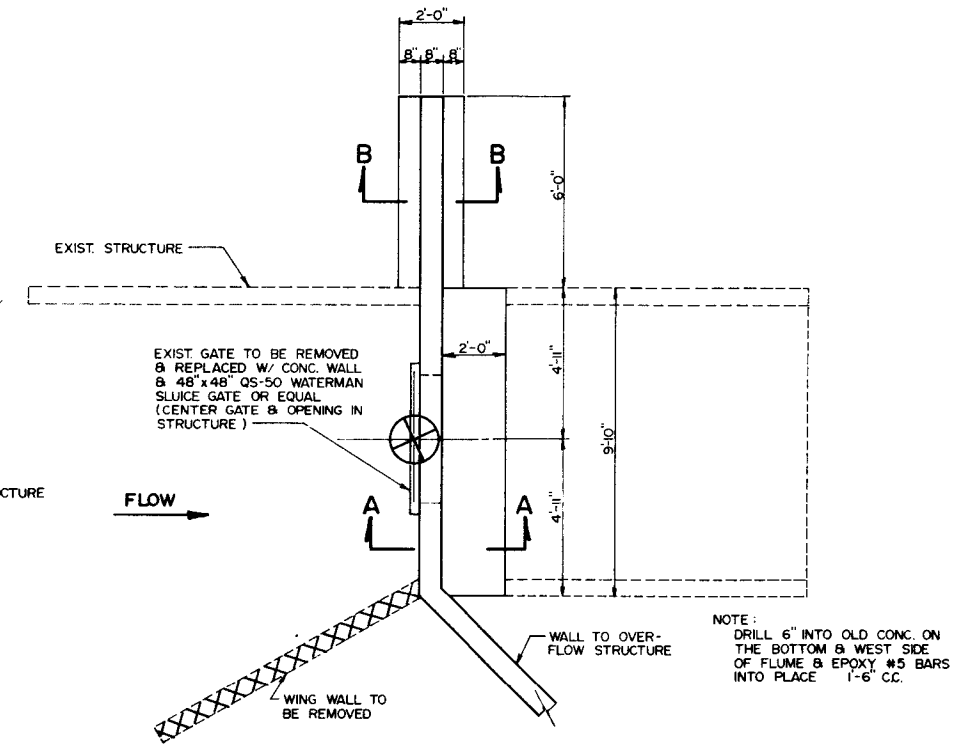

NOTE:
DRILL 6" INTO OLD CONC. ON THE BOTTOM & WEST SIDE OF FLUME & EPOXY #5 BARS INTO PLACE 1'-6" C.C.

PLAN
SCALE 1" = 3'-0"

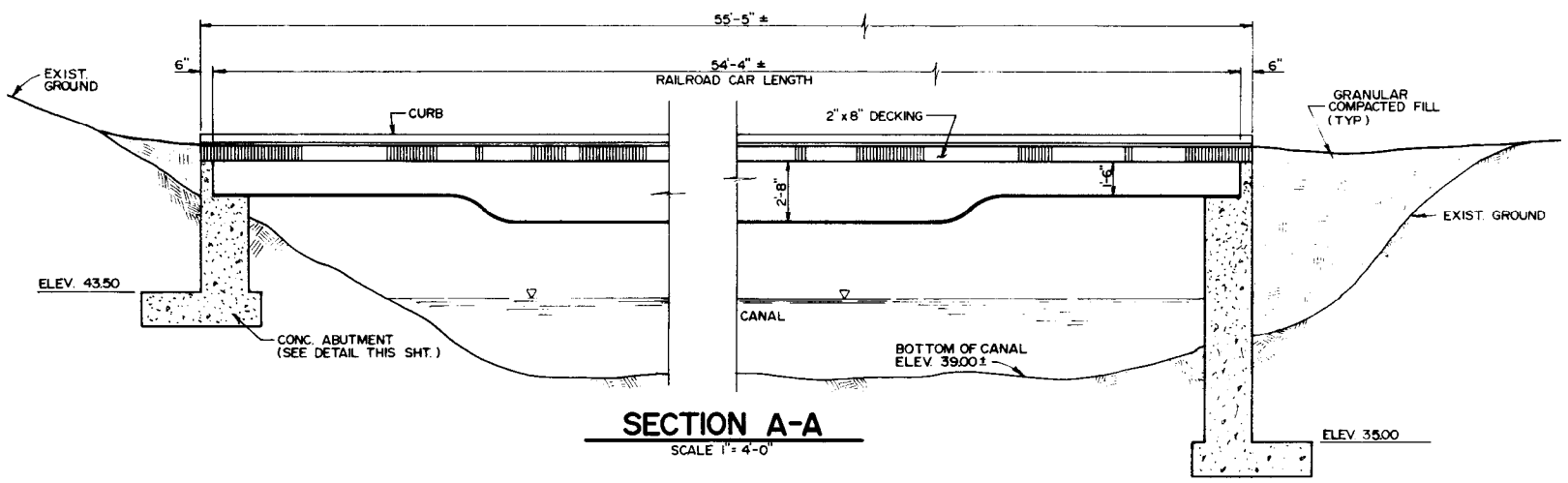

SECTION A-A
SCALE 1" = 4'-0"

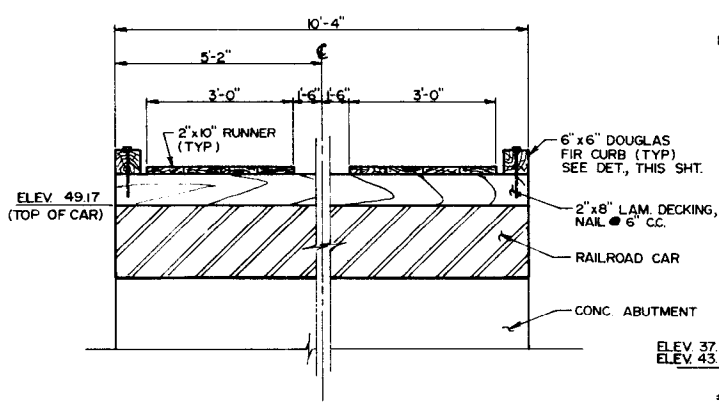

SECTION B-B
SCALE 1" = 2'-0"

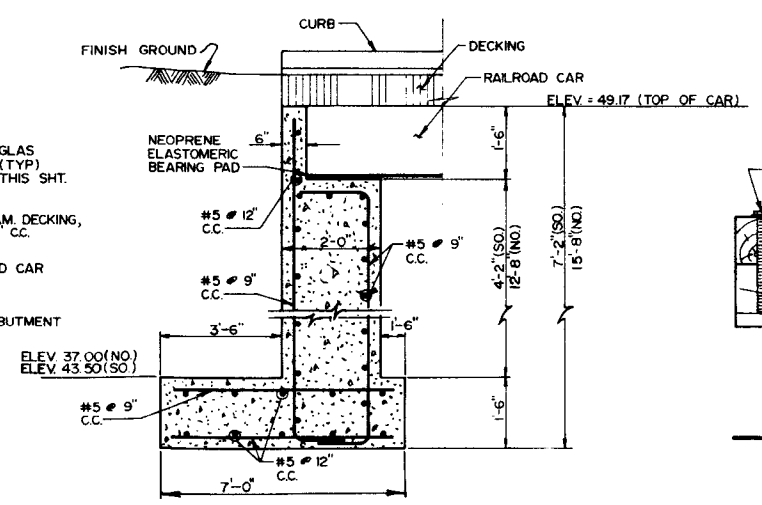

ABUTMENT DETAIL
N.T.S.

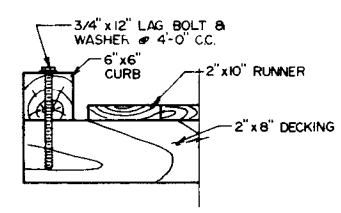

CURB DETAIL
SCALE 1" = 1'-0"

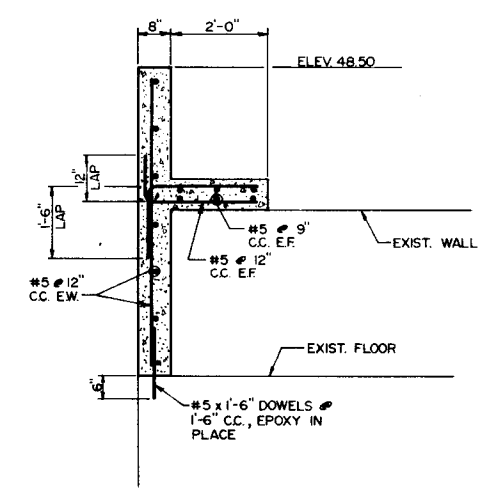

SECTION A-A
N.T.S.

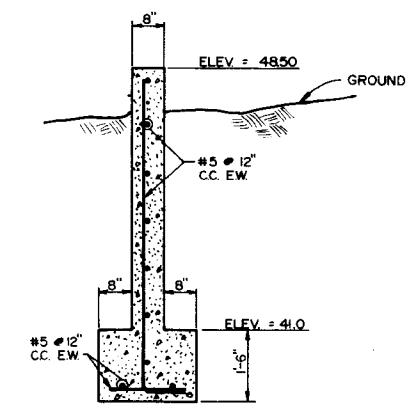

SECTION B-B
N.T.S.

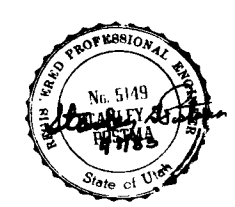

BRIGHTON NORTH POINT CANAL
SCHEDULE E
BRIDGE & CANAL STRUCTURE
PLANS, SECTIONS, & DETAILS

Rev.	By	Date	Remarks
1	ADC	11-15-84	MODIFIED BRIDGE

Bingham Engineering
Design: J.L.D. Checked: S.S.P.
Drawn: J.R.W. Checked:
Approved: Ralph R. Bingham
Date DEC. 1982 | 397 | Sht. E2 of 4

VERIFY SCALES
BAR IS ONE INCH ON ORIGINAL DRAWING
0 1"
IF NOT ONE INCH ON THIS SHEET, ADJUST SCALES ACCORDINGLY

Utah Lake Jordan River
Flood Management Program

FOR: IVING 44 142 41 38 1 5

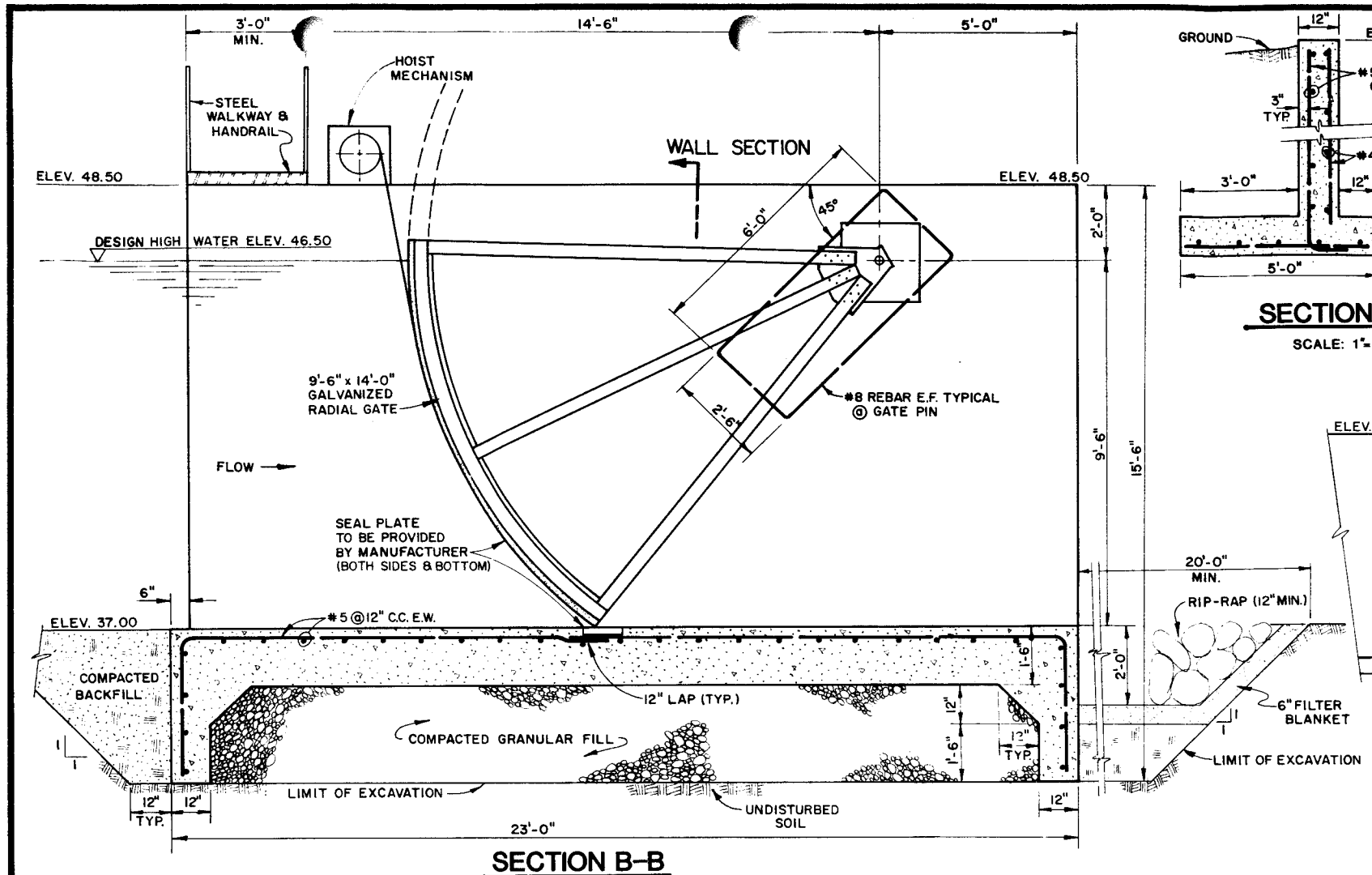

SECTION B-B

SCALE: 1"=2'

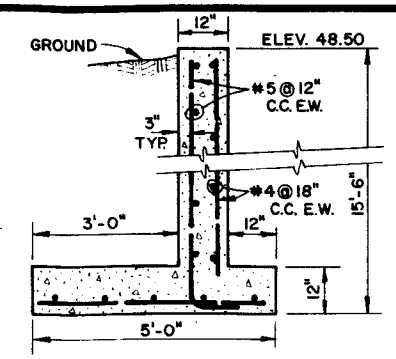

SECTION F-F

SCALE: 1"=2'

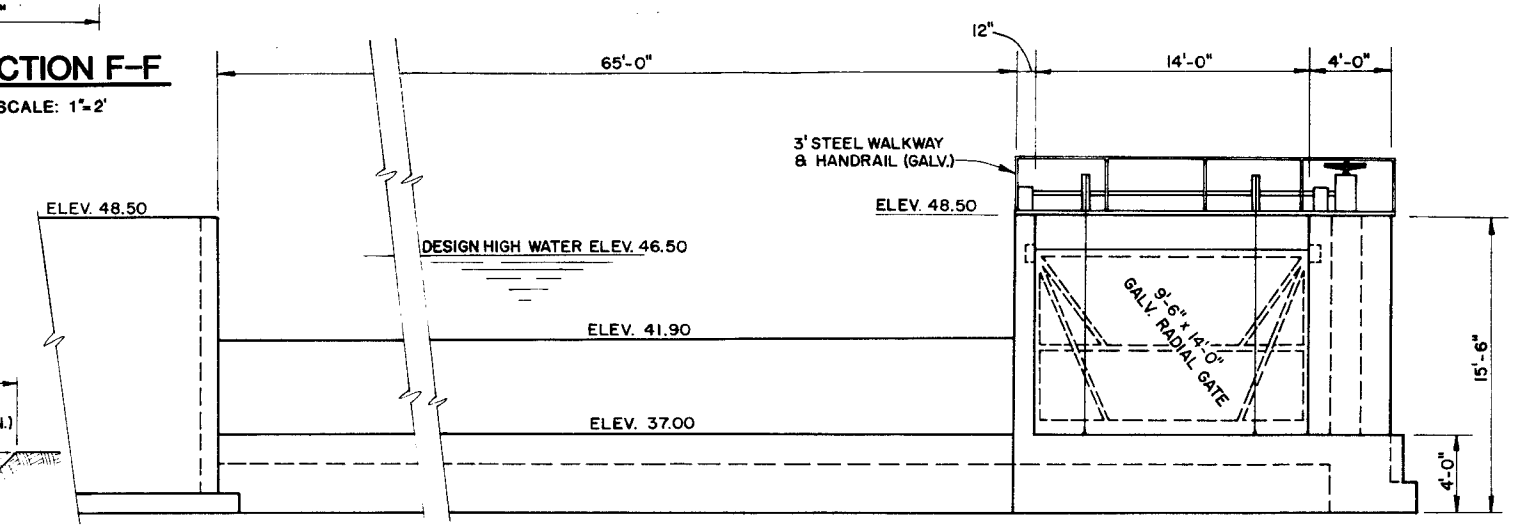

ELEVATION

SCALE: 1"=5'

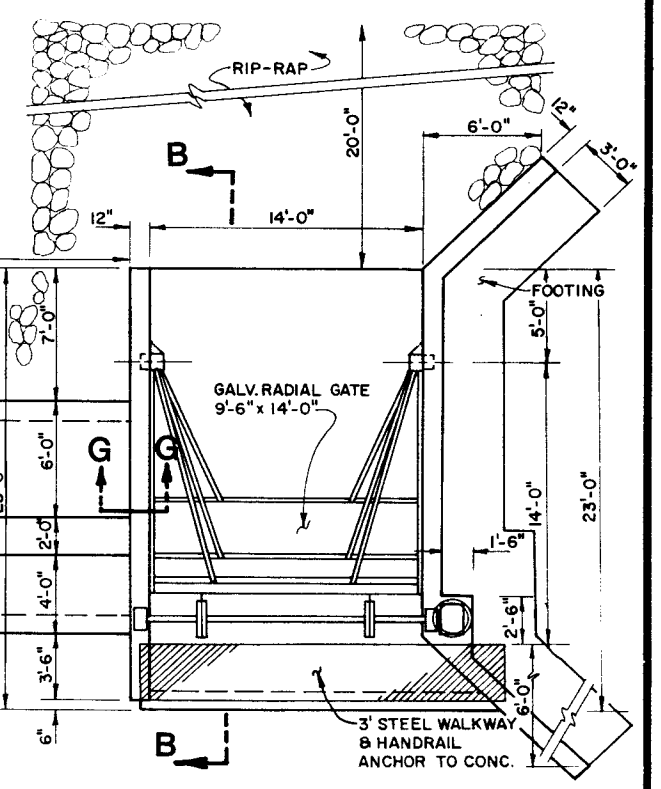

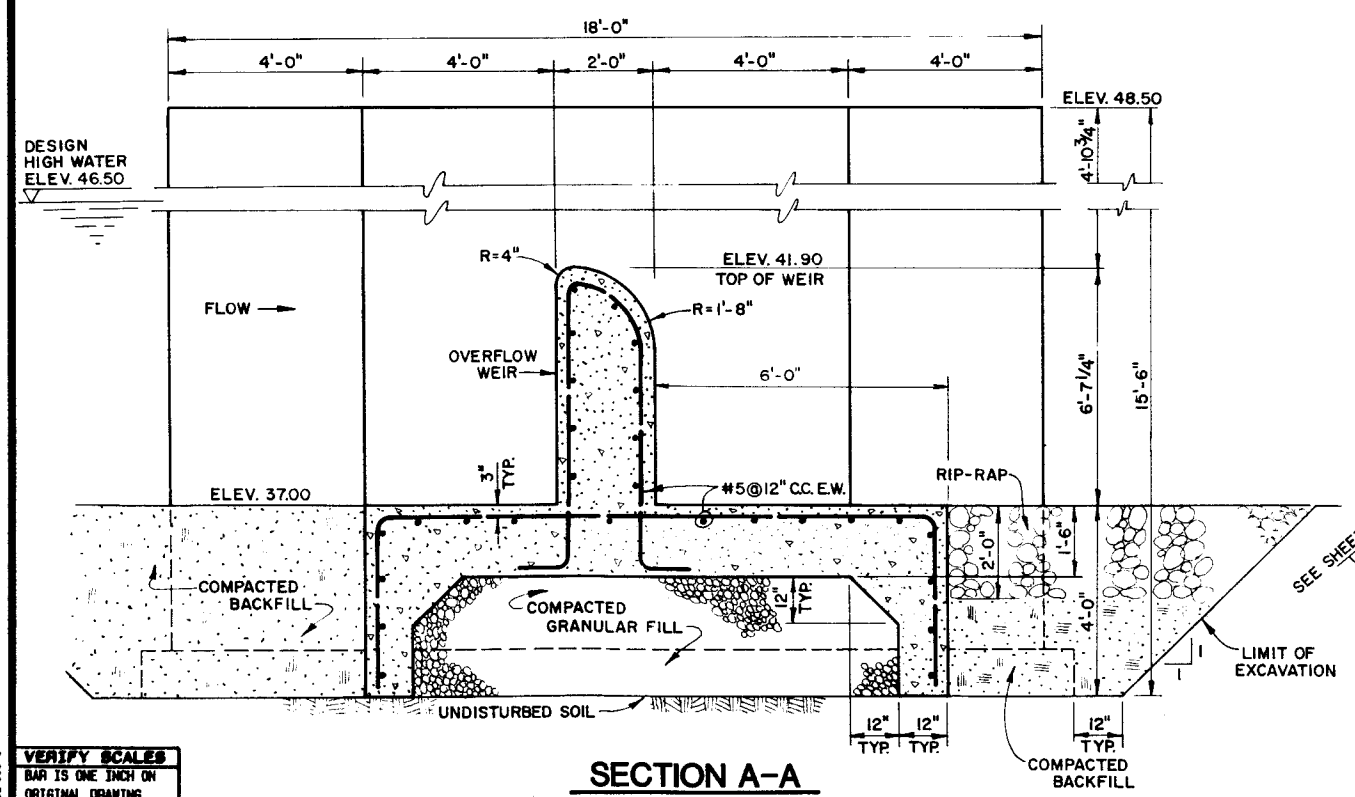

SECTION A-A

SCALE: 1"=2'

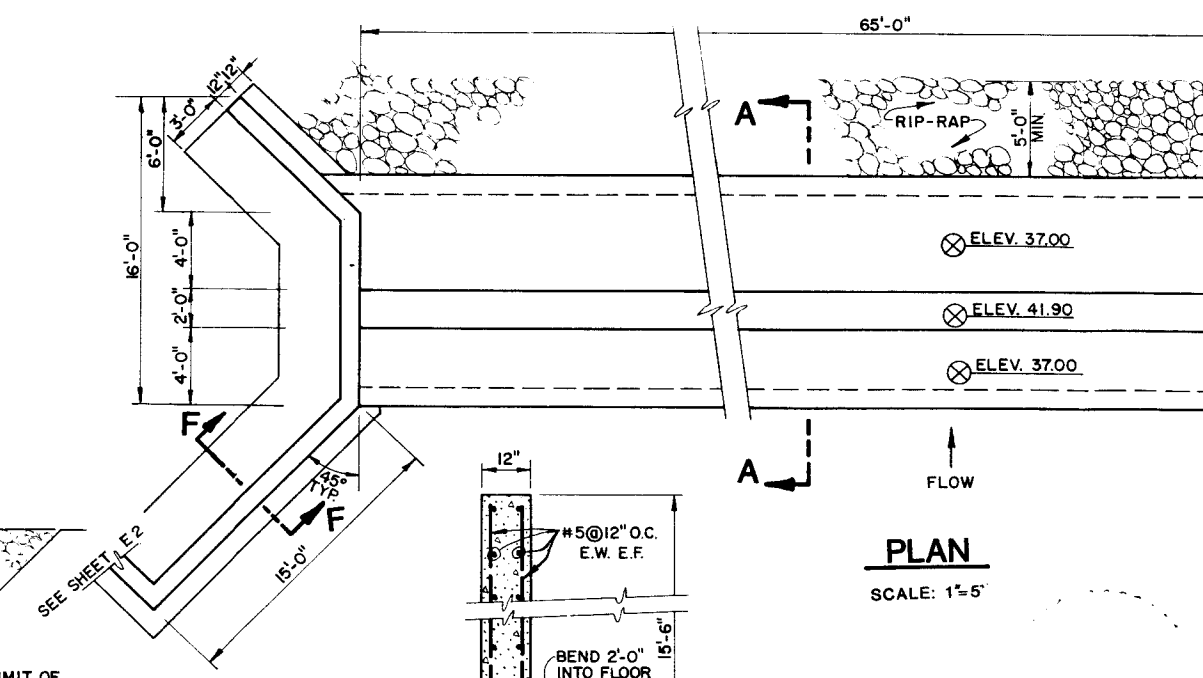

PLAN

SCALE: 1"=5'

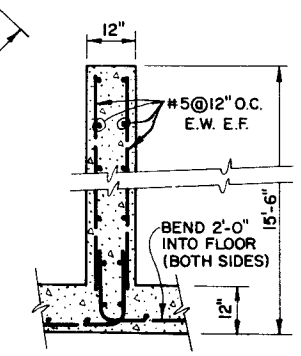

SECTION G-G

SCALE: 1"=2'

Rev.	By	Date	Remarks
1	AC	NOV. '84	REVISED STRUCTURE

BRIGHTON NORTH POINT CANAL

SCHEDULE E

JORDAN RIVER PROJECT

DIVERSION STRUCTURE PLAN & SECTIONS

Bingham Engineering
165 Wright Brothers Drive
Salt Lake City, Utah 84116
Telephone: 801 532-2520

Design: ADC
Drawn: CLL
Checked: ADC
Reviewed: SSP

Date NOV. 1984 | Project # 397-002 | Sht. E3 of 4

VERIFY SCALES
BAR IS ONE INCH ON ORIGINAL DRAWING
0 1"
IF NOT ONE INCH ON THIS SHEET, ADJUST SCALES ACCORDINGLY

Utah Lake Jordan River Flood Management Program

BRUNING 44-152 60513

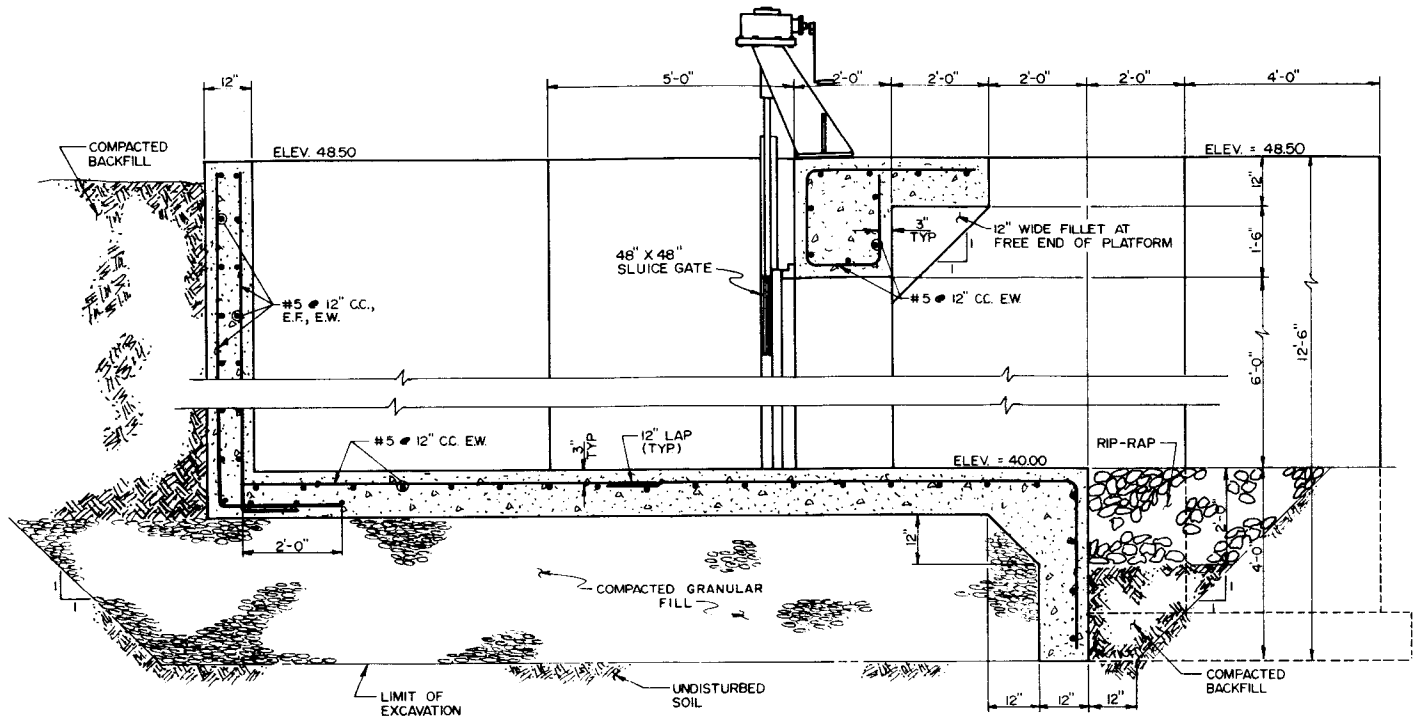

SECTION C-C

SCALE 1" = 2'-0"

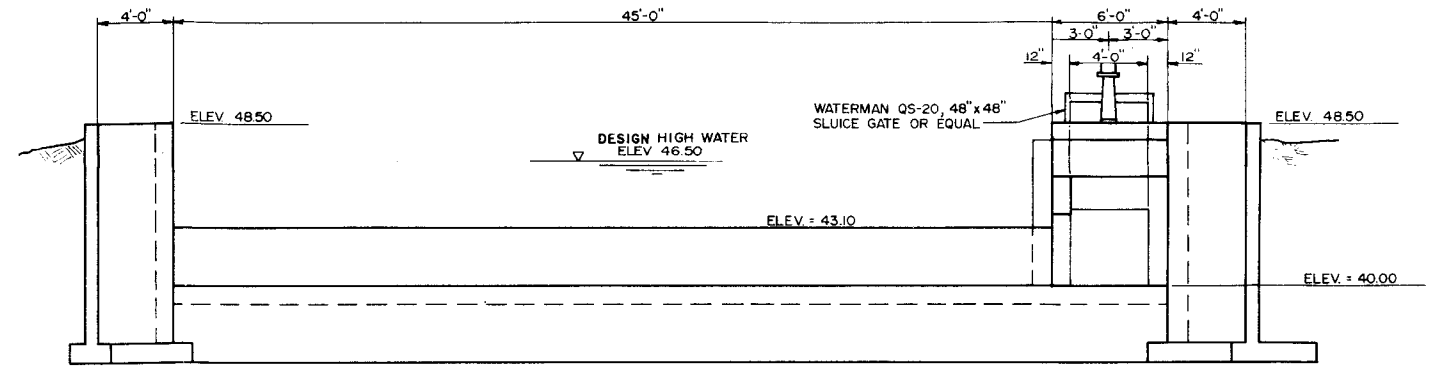

ELEVATION

SCALE 1" = 5'-0"

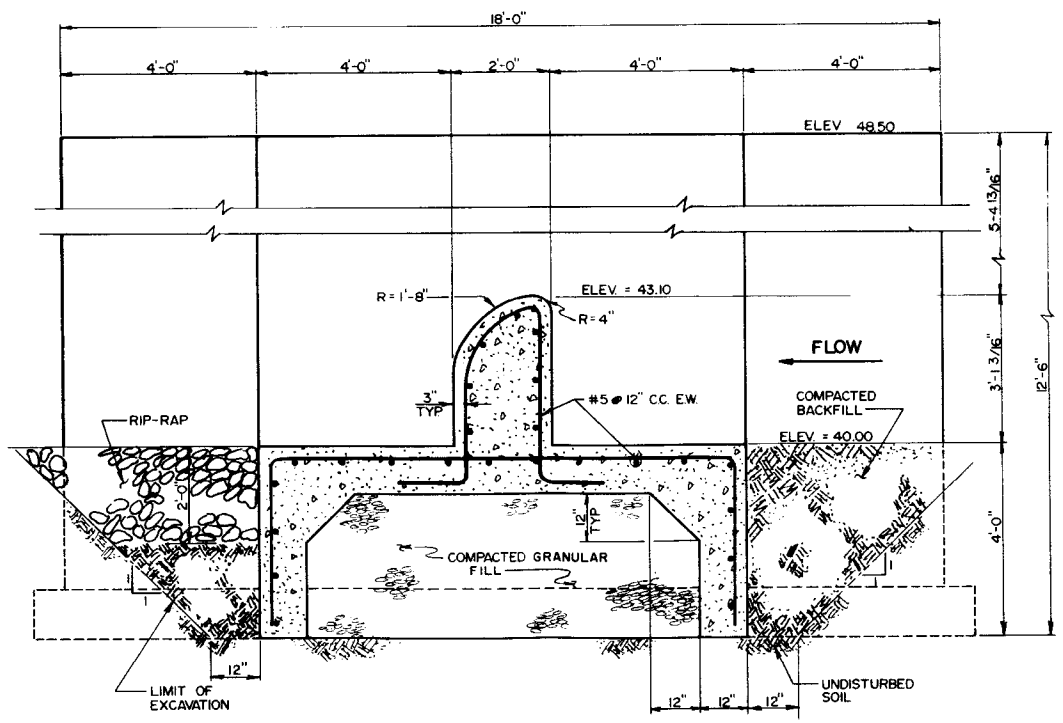

SECTION D-D

SCALE 1" = 2'-0"

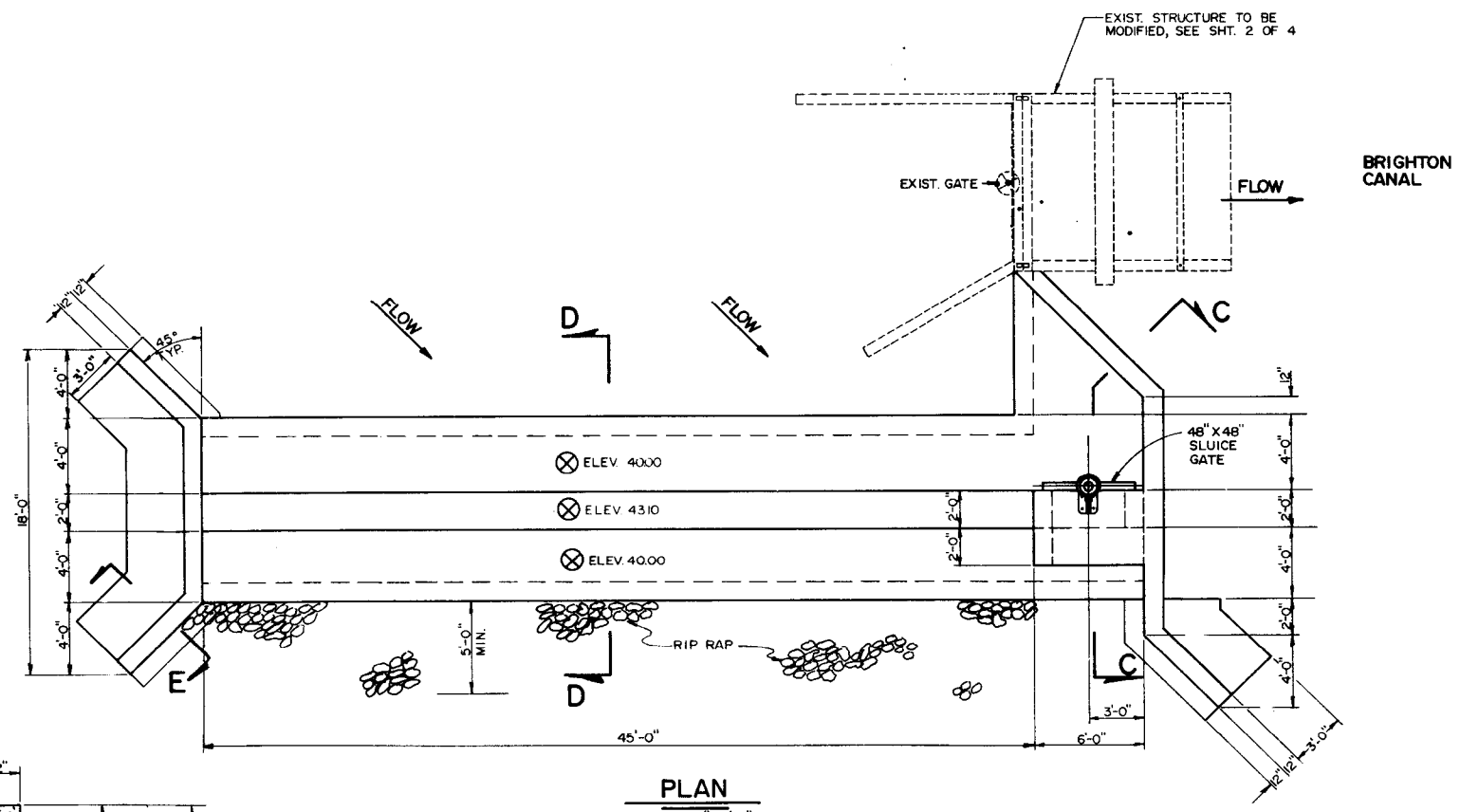

PLAN

SCALE 1" = 5'-0"

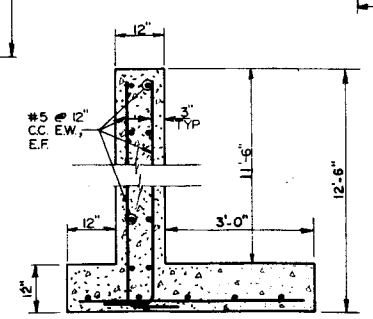

SECTION E-E

SCALE 1" = 2'-0"

REGISTERED PROFESSIONAL ENGINEER No 5149 STATE OF UTAH

BRIGHTON NORTH POINT CANAL

SCHEDULE E

OVERFLOW STRUCTURE

PLAN & SECTIONS

Rev.	By	Date	Remarks

Bingham Engineering

Design: SSP
Drawn: RPE, JRW
Approved:
Checked: SSP
Chief: J. R. Bingham

Date DEC. 1982 | 397 | Sht. E 4 of 4

VERIFY SCALES
BAR IS ONE INCH ON ORIGINAL DRAWING
0 1"
IF NOT ONE INCH ON THIS SHEET, ADJUST SCALES ACCORDINGLY

Utah Lake Jordan River Flood Management Program